Mounting groups hydraulic attachments

North America



Table of contents – sorted by mounting groups

Mounting group US (Euro)	Hydraulic breakers		Drum cutters						Combi cutters	Concrete busters	
	Premium	Essential									
	SB/MB/ HB	ES/EC	VC	DC[1]	ER	ERC	ER-L	ADU	CC	CB	
SB 52 (1)	SB 52										
SB 102 (2)	SB 102										
SB 152 (3)	SB 152			DC 200[1]					CC 350[1]	CB 350	
	SBU 160[1]										
SB 202 (4)	SB 202	ES 60[1]			ER 40[3.]						
	SBU 220				ER 50[2]						
					ER 100[2]						
SB 302 (5)	SB 302	ES 70[1]		DC 400[1]							
	SBU 340										
SB 552 (6)	SB 452	ES 80[1]									
	SB 552										
SB 702 (7)	SB 702										
MTG 06 (8)	MB 500[1]	EC 90		DC 600[1]	ER 250		ER 250 L	ADU 250	CC 650[1]	CB 750	
	MB 700[1]						ER 400 L	ADU 450			
	MB 750						ER 450 L				
	MB 800[1]	EC 100		DC 1000[1]	ER 600				CC 950[1]	CB 950	
	MB 1000						ER 600 L	ADU 600			
MTG 08 (9)	MB 1200	EC 120	VC 1400	DC 1200[1]	ER 650	ERC 250	ER 1500 L[2]	ADU 1500[2]	CC 1600	CB 2500	
	MB 1500										
	MB 1600[1]	EC 135			ER 1500[2]	ERC 600			CC 1700[1]		
	MB 1650		VC 2000				ER 2000 L[2]	ADU 2000[2]			
	MB 1700[1]	EC 140			ER 1700[2]	ERC 650[2]			CC 2300		
MTG 10 (10)	HB 2000	EC 150	VC 2000	DC 2000[1]	ER 1500[2]	ERC 650[2]	ER 1500 L[2]	ADU 1500[2]	CC 2500[1]		
	HB 2200[1]			DC 2100[1]	ER 1700[2]	ERC 1500[2]					
	HB 2500	EC 155	VC 3000	DC 2900[1]	ER 2000	ERC 1700[2]	ER 2000 L[2]	ADU 2000[2]	CC 3100		
					ER 3000	ERC 2000[2]					
						ERC 3000					
MTG 14 (11)	HB 3100	EC 165							CC 3700	CB 4500	
	HB 3600								CC 4700[1]		
	HB 4100	EC 180								CB 5500[1]	
	HB 4700								CC 5000		

[1] Phased-out models
[2] 2 combined bolt hole patterns
[3] Only with sandwich plate

	Demolition pulverizers	Bulk pulverizers	Hydro magnets	Hydraulic compactors	Bucket crushers	Bucket screeners	Multi grapples	Steel cutters	Page
	DP	BP	HM	HC	BC	BS	MG	SC	
							MG 100		**10**
				HC 150[2]					**11**
							MG 200		**12**
							MG 300		
				HC 350[2]					**13**
				HC 450[2]					
							MG 400		**14**
							MG 500		
									15
									16
				HC 850	BC 2100		MG 800		**17**
	DP 1820	BP 1650	HM 1500	HC 1050	BC 1500[1]		MG 1000		**18**
	DP 2000[1]				BC 2250[1]		MG 1500		
	DP 2320	BP 2050	HM 2000	HC 1055[1]	BC 2500		MG 1800		
	DP 2800[1]	BP 3050			BC 3500[1]		MG 2300	SC 2500	**19**
	DP 3220				BC 3700		MG 2700		
					BC 4900[1]		MG 3000		
	DP 4220	BP 4050			BC 5300			SC 3600	**20**
								SC 4500	

Table of contents – sorted by mounting groups

Mounting group	Hydraulic breakers		Drum cutters						Combi cutters	Concrete busters	
	Premium	Essential									
	SB/MB/HB	ES/EC	VC	DC[1]	ER	ERC	ER-L	ADU	CC	CB	
MTG 12 (12)	HB 3000[1]								CC 3300[1]		
	HB 4200[1]										
MTG 16 (13)	HB 5800										
MTG 18 (14)	HB 7000				ER 4000				CC 6000[1]	CB 7500	
					ER 5500				CC 7000		
MTG 20 (15)	HB 10000										
MTG 02 (16)		EC 40									
		EC 50									
		PB 110[1]									
		PB 160[1]									
MTG 04 (17)		EC 60			ER 50[2]	ERC 50	ER 100 L	ADU 100			
		EC 70									
		EC 80									
		PB 210[1]			ER 100[2]	ERC 100					
		PB 310[1]									
		PB 420[1]									
SB 1102 (18)	SB 1102										
SC 270 (19)											
SC 600 (20)											
MTG 21 (21)							ERL 700	ERL 700			
							ERL 1100	ERL 1100			
MTG 22 (22)											
MTG 23 (23)											

[1] Phased-out models
[2] 2 combined bolt hole pattern

	Demolition pulverizers	Bulk pulverizers	Hydro magnets	Hydraulic compactors	Bucket crus-hers	Bucket scree-ners	Multi grapp-les	Steel cutters	Page
	DP	BP	HM	HC	BC	BS	MG	SC	
									21
									22
							MG 5000	SC 6200	**23**
								SC 8300	**24**
				HC 150[2]					**25**
				HC 350[2]					**26**
				HC 450[2]					
									27
								SC 270	**28**
								SC 600	**29**
									30
					BS 2500	BS 1600			**31**
					BC 3700	BS 2200			**32**

Table of contents – sorted by hydraulic attachment tools

Type		Mounting group US (Euro)	Page
Hydraulic breakers			
SB	**SB 52**	SB 52 (1)	10
	SB 102	SB 102 (2)	11
	SB 152	SB 152 (3)	12
	SB 202	SB 202 (4)	13
	SB 302	SB 302 (5)	14
	SB 452	SB 552 (6)	15
	SB 552	SB 552 (6)	15
	SB 702	SB 702 (7)	16
	SB 1102	SB 1102 (18)	27
SBU	**SBU 160** [1]	SB 152 (3)	12
	SBU 220	SB 202 (4)	13
	SBU 340	SB 302 (5)	14
MB	**MB 500** [1]	MTG 06 (8)	17
	MB 700 [1]	MTG 06 (8)	17
	MB 750	MTG 06 (8)	17
	MB 800 [1]	MTG 06 (8)	17
	MB 1000	MTG 06 (8)	17
	MB 1200	MTG 08 (9)	18
	MB 1500	MTG 08 (9)	18
	MB 1600 [1]	MTG 08 (9)	18
	MB 1650	MTG 08 (9)	18
	MB 1700 [1]	MTG 08 (9)	18
HB	**HB 2000**	MTG 10 (10)	19
	HB 2200 [1]	MTG 10 (10)	19
	HB 2500	MTG 10 (10)	19
	HB 3000 [1]	MTG 12 (12)	21
	HB 3100	MTG 14 (11)	20
	HB 3600	MTG 14 (11)	20
	HB 4100	MTG 14 (11)	20
	HB 4200 [1]	MTG 12 (12)	21
	HB 4700	MTG 14 (11)	20
	HB 5800	MTG 16 (13)	22
	HB 7000	MTG 18 (14)	23
	HB 10000	MTG 20 (15)	24

Type		Mounting group US (Euro)	Page
Hydraulic breakers			
ES	**ES 60** [1]	SB 202 (4)	13
	ES 70 [1]	SB 302 (5)	14
	ES 80 [1]	SB 552 (6)	15
EC	**EC 40**	MTG 02 (16)	25
	EC 50	MTG 02 (16)	25
	EC 60	MTG 04 (17)	26
	EC 70	MTG 04 (17)	26
	EC 80	MTG 04 (17)	26
	EC 90	MTG 06 (8)	17
	EC 100	MTG 06 (8)	17
	EC 120	MTG 08 (9)	18
	EC 135	MTG 08 (9)	18
	EC 140	MTG 08 (9)	18
	EC 150	MTG 10 (10)	19
	EC 155	MTG 10 (10)	19
	EC 165	MTG 14 (11)	20
	EC 180	11 MTG 14 (11)	20
PB	**PB 110** [1]	MTG 02 (16)	25
	PB 160 [1]	MTG 02 (16)	25
	PB 210 [1]	MTG 04 (17)	26
	PB 310 [1]	MTG 04 (17)	26
	PB 420 [1]	MTG 04 (17)	26

[1] Phased-out models

Type		Mounting group US (Euro)	Page
Drum cutters			
VC	VC 1400	MTG 08 (9)	18
	VC 2000	MTG 08 / 10 (9/10)	18/19
	VC 3000	MTG 10 (10)	19
DC	DC 200[1]	SB 152 (3)	12
	DC 400[1]	SB 302 (5)	14
	DC 600[1]	MTG 06 (8)	17
	DC 1000[1]	MTG 06 (8)	17
	DC 1200[1]	MTG 08 (9)	18
	DC 2000[1]	MTG 10 (10)	19
	DC 2100[1]	MTG 10 (10)	19
	DC 2900[1]	MTG 10 (10)	19
ER	ER 40	SB 202 (4)	13
	ER 50	SB 202/MTG 04 (4/17)	13/26
	ER 100	SB 202/MTG 04 (4/17)	13/26
	ER 250	MTG 06 (8)	17
	ER 600	MTG 06 (8)	17
	ER 650	MTG 08 (9)	18
	ER 1500	MTG 08 / 10 (9/10)	18/19
	ER 1700	MTG 08 / 10 (9/10)	18/19
	ER 2000	MTG 10 (10)	19
	ER 3000	MTG 10 (10)	19
	ER 4000	MTG 18 (14)	23
	ER 5500	MTG 18 (14)	23
ERC	ERC 50	MTG 04 (17)	26
	ERC 100	MTG 04 (17)	26
	ERC 250	MTG 08 (9)	17
	ERC 600	MTG 08 (9)	18
	ERC 650	MTG 08 / 10 (9/10)	18/19
	ERC 1500	MTG 08 / 10 (9/10)	18/19
	ERC 1700	MTG 08 / 10 (9/10)	18/19
	ERC 2000	MTG 10 (10)	19
	ERC 3000	MTG 10 (10)	19

Type		Mounting group US (Euro)	Page
Drum cutters			
ER-L	ER 100 L	MTG 04 (17)	26
	ER 250 L	MTG 06 (8)	17
	ER 400 L	MTG 06 (8)	17
	ER 450 L	MTG 06 (8)	17
	ER 600 L	MTG 06 (8)	17
	ERL 700	MTG 21 (21)	30
	ERL 1100	MTG 21 (21)	30
	ER 1500 L	MTG 08 / 10 (9/10)	18/19
	ER 2000 L	MTG 08 / 10 (9/10)	18/19
ADU	ADU 100	MTG 04 (17)	26
	ADU 250	MTG 06 (8)	17
	ADU 450	MTG 06 (8)	17
	ADU 600	MTG 06 (8)	17
	ERL 700	MTG 21 (21)	30
	ERL 1100	MTG 21 (21)	30
	ADU 1500	MTG 08 / 10 (9/10)	18/19
	ADU 2000	MTG 08 / 10 (9/10)	18/19
Concrete busters			
CB	CB 350	SB 152 (3)	12
	CB 750	MTG 06 (8)	17
	CB 950	MTG 06 (8)	17
	CB 2500	MTG 08 (9)	18
	CB 4500	MTG 14 (11)	20
	CB 5500	MTG 14 (11)	20
	CB 7500	MTG 18 (14)	23

[1] Phased-out models

Table of contents – sorted by hydraulic attachment tools

Type		Mounting group US (Euro)	Page
Combi cutters			
CC	CC 350[1]	SB 152 (3)	12
	CC 650[1]	MTG 06 (8)	17
	CC 950[1]	MTG 06 (8)	17
	CC 1600	MTG 08 (9)	18
	CC 1700[1]	MTG 08 (9)	18
	CC 2300	MTG 08 (9)	18
	CC 2500[1]	MTG 10 (10)	19
	CC 3100	MTG 10 (10)	19
	CC 3300[1]	MTG 12 (12)	21
	CC 3700	MTG 14 (11)	20
	CC 4700[1]	MTG 14 (11)	20
	CC 5000	MTG 14 (11)	20
	CC 6000[1]	MTG 18 (14)	23
	CC 7000	MTG 18 (14)	23
Pulverizers			
DP	DP 1820	MTG 08 (9)	18
	DP 2320	MTG 08 (9)	18
	DP 3220	MTG 10 (10)	19
	DP 4220	MTG 14 (11)	20
	DP 2000[1]	MTG 08 (9)	18
	DP 2800[1]	MTG 10 (10)	19
BP	BP 1650	MTG 08 (9)	18
	BP 2050	MTG 08 (9)	18
	BP 3050	MTG 10 (10)	19
	BP 4050	MTG 14 (11)	20
Hydro magnets			
HM	HM 1500	MTG 08 (9)	18
	HM 2000	MTG 08 (9)	18

Type		Mounting group US (Euro)	Page
Hydraulic compactors			
HC	HC 150	SB 102 (2)	11
	HC 150	MTG 02 (16)	25
	HC 350	SB 202 (4)	13
	HC 350	MTG 04 (17)	26
	HC 450	SB 202 (4)	13
	HC 450	MTG 04 (17)	26
	HC 850	MTG 06 (8)	17
	HC 1050	MTG 08 (9)	18
	HC 1055[1]	MTG 08 (9)	18
Bucket screener			
BS	BS 1600	MTG 22 (22)	31
	BS 2200	MTG 23 (23)	32
Bucket crushers			
BC	BC 1500[1]	MTG 08 (9)	18
	BC 2100	MTG 06 (8)	17
	BC 2250[1]	MTG 06 (9)	18
	BC 2500	MTG 06 (9)	18
	BC 3500[1]	MTG 10 (10)	19
	BC 3700	MTG 10 (10)	19
	BC 4900[1]	MTG 10 (10)	19
	BC 5300	MTG 14 (11)	20

[1] Phased-out models

Type		Mounting group US (Euro)	Page
Multi grapples			
MG	**MG 100**	SB 52 (1)	10
	MG 200	SB 152 (3)	12
	MG 300	SB 152 (3)	12
	MG 400	SB 302 (5)	14
	MG 500	SB 302 (5)	14
	MG 800	MTG 06 (8)	17
	MG 1000	MTG 08 (9)	18
	MG 1500	MTG 08 (9)	18
	MG 1800	MTG 08 (9)	18
	MG 2300	MTG 10 (10)	19
	MG 2700	MTG 10 (10)	19
	MG 3000	MTG 10 (10)	19
	MG 5000	MTG 18 (14)	23
Steel cutters			
SC	**SC 270**	SC 270 (19)	28
	SC 600	SC 600 (20)	29
	SC 2500	MTG 10 (10)	19
	SC 3600	MTG 14 (11)	20
	SC 4500	MTG 14 (11)	20
	SC 6200	MTG 18 (14)	23
	SC 8300	MTG 20 (15)	24

[1] Phased-out models

Mounting group - SB 52 (1)

SB 52 · MG 100

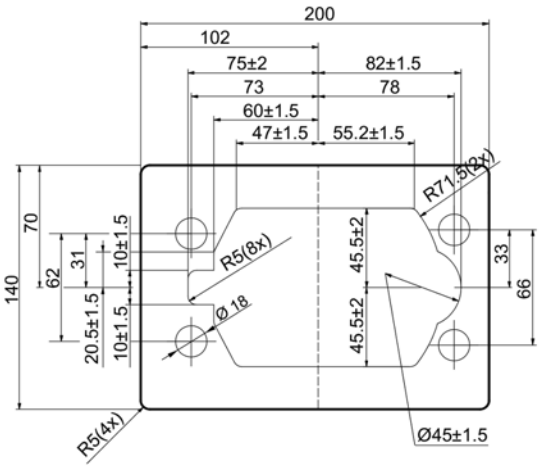

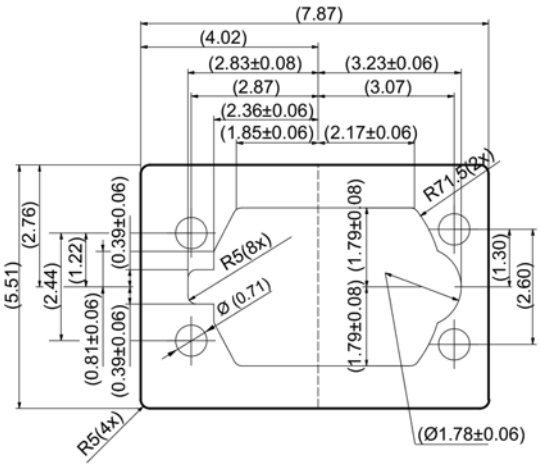

Thickness top plates

Type	mm	inch
SB 52	Blind bore	
MG 100	20	0.79



Mounting group - SB 102 (2)

SB 102 · HC 150

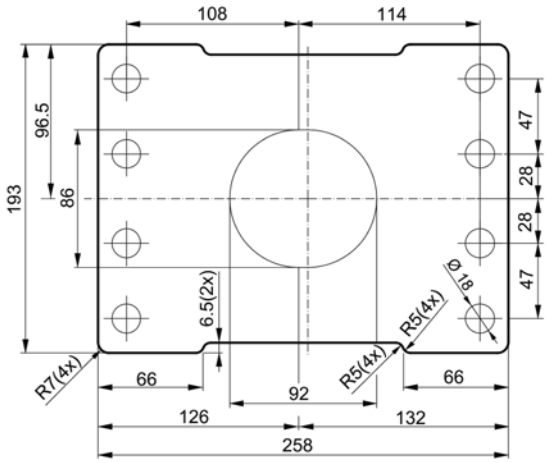

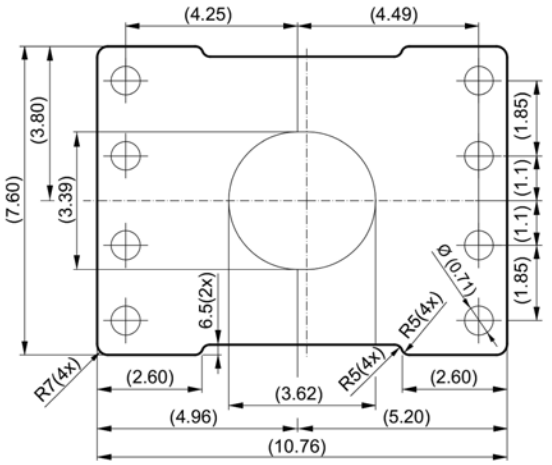

Thickness top plates

Type	mm	inch
SB 102	21	0.83
HC 150	16	0.63





Mounting group - SB 152 (3)

SB 152 · SBU 160 · CB 350 · MG 200/300

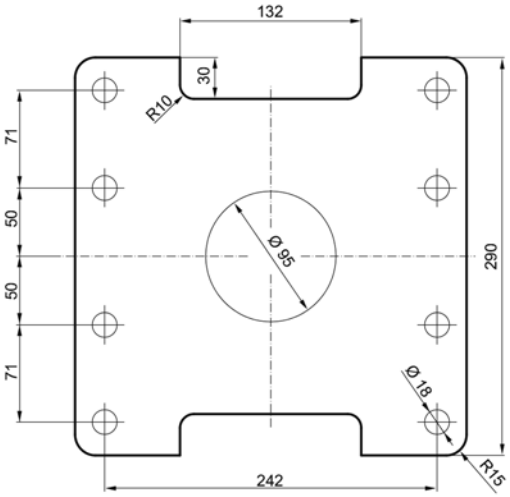

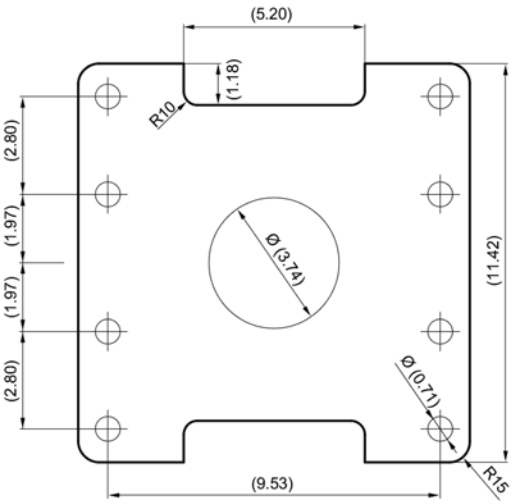

Thickness top plates

Type	mm	inch
SB 152	24	0.95
SBU 160 [1]	19	0.75
DC 200 [1]	17.5	0.69
CC 350 [1]	18	0.71
CB 350	18	0.71
MG 200	18	0.71
MG 300	18	0.71

[1] Phased-out models





Mounting group - SB 202 (4)

SB 202 · SBU 220 · ES 60 · ER 40/50/100 · HC 350/450

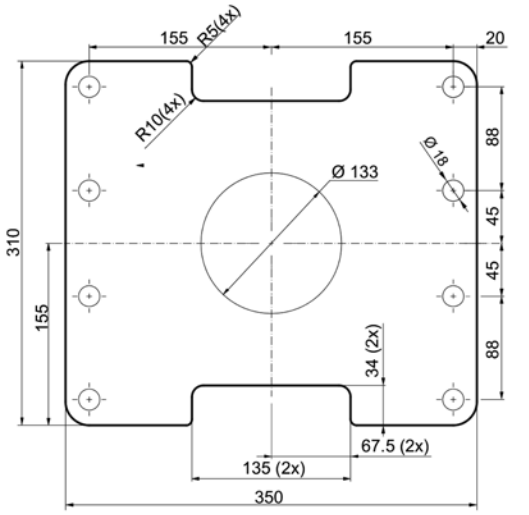

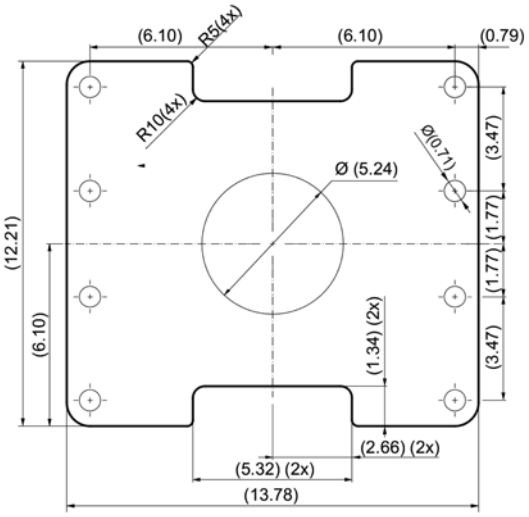

Thickness top plates

Type	mm	inch
SB 202	28	1.1
SBU 220	28	1.1
ES 60 [1]	28	1.1
ER 40	Only with sandwich plate	
ER 50	17.5	0.69
ER 100	17.5	0.69
HC 350	20	0.79
HC 450	20	0.79





Mounting group - SB 302 (5)

SB 302 · SBU 340 · ES 70 · MG 400/500

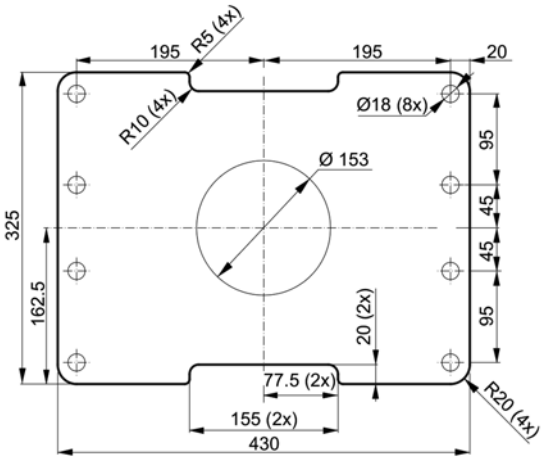

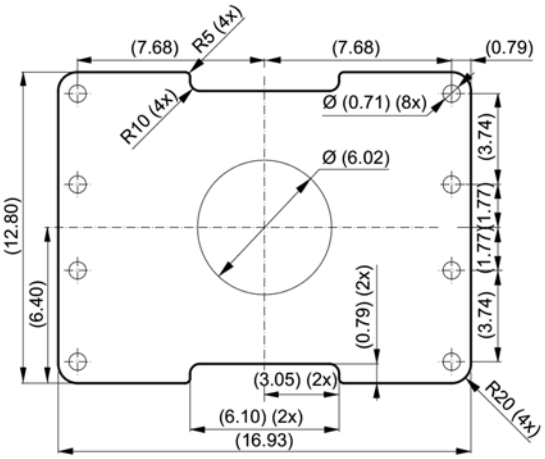

Thickness top plates

Type	mm	inch
SB 302	30	1.18
SBU 340	30	1.18
ES 70 [1]	27	1.06
DC 400 [1]	17.5	0.69
MG 400	25	0.98
MG 500	25	0.98

[1] Phased-out models







Mounting group - SB 552 (6)

SB 452/552 · ES 80

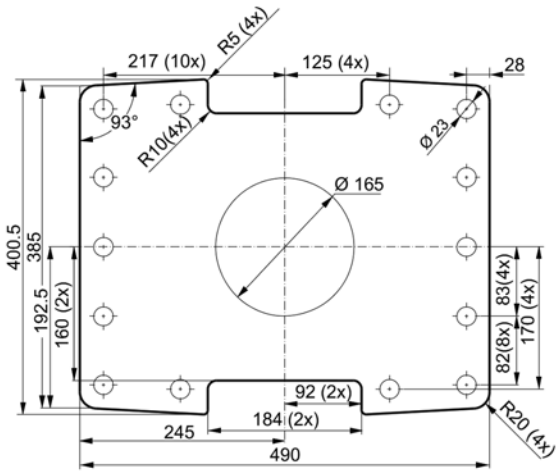

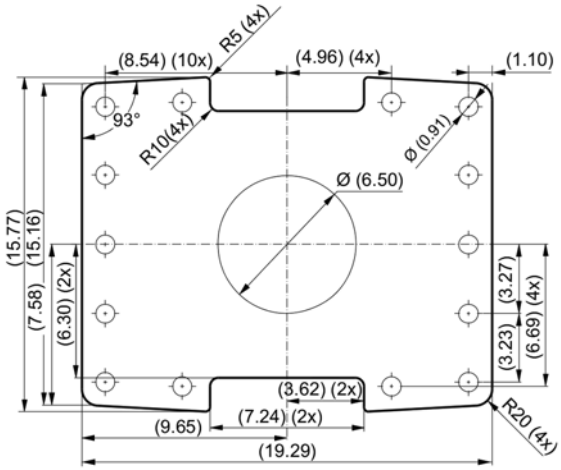

Thickness top plates

Type	mm	inch
SB 452	30	1.18
SB 552	35 [1]	1.38
SB 552	38 [2]	1.5
ES 80 [1]	30	1.18

[1] 10 holes along the two edges
[2] 4 middle







Mounting group - SB 702 (7)

SB 702

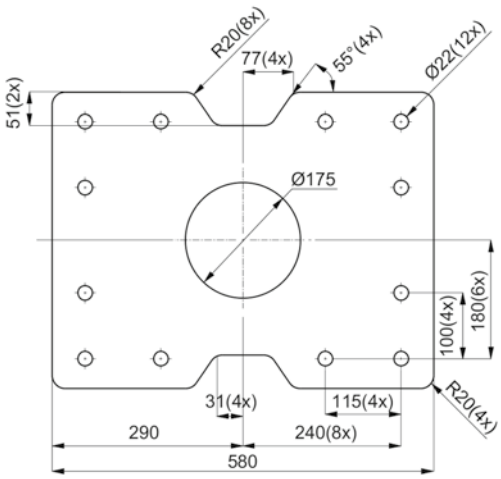

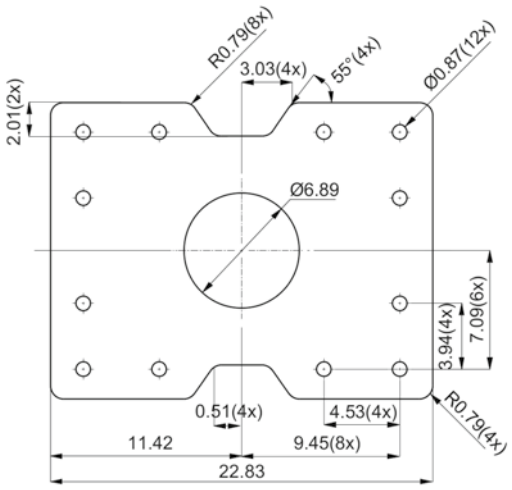

Thickness top plates

Type	mm	inch
SB 702	39 (8 x)	1.54 (8 x)
SB 702	42 (inner, 4 x)	1.65 (inner, 4 x)



Mounting group - MTG 06 (8)

MB 750/1000 · EC 90/100 · ER 250/600 · ER 250/400/450/600 L · ADU 250/450/600 · CB 750/950 · HC 850 · BC 2100 · MG 800

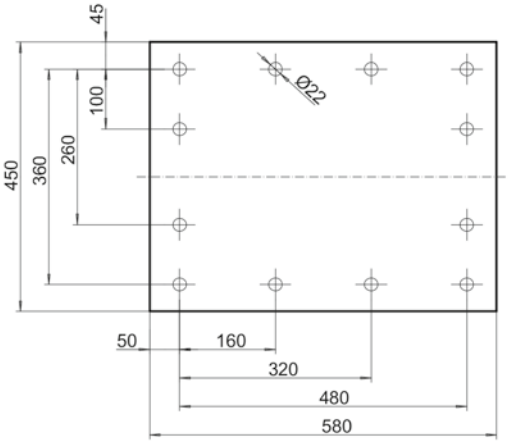

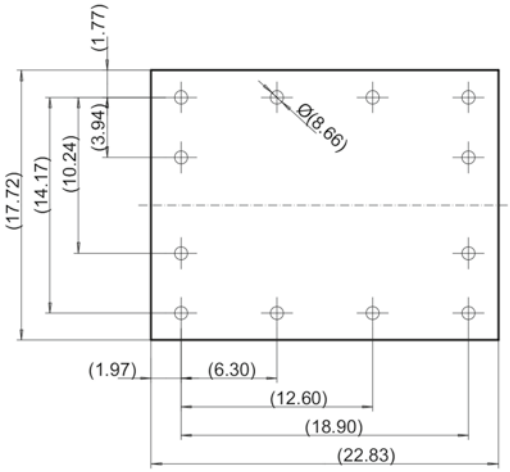

Thickness top plates

Type	mm	inch
MB 500[1]	25	0.98
MB 700[1]	25	0.98
MB 750	25	0.98
MB 800[1]	25	0.98
MB 1000	25	0.98
EC 90	25	0.98
EC 100	47	1.85
DC 600[1]	22.5	0.89
DC 1000[1]	22.5	0.89
ER 250	22.5	0.89
ER 600	22.5	0.89
ER 250 L	27.5	1.08
ER 400 L	27.5	1.08
ER 450 L	27.5	1.08
ER 600 L	27.5	1.08
ADU 250	27.5	1.08
ADU 450	27.5	1.08
ADU 600	27.5	1.08
CC 650[1]	24	0.95
CC 950[1]	24	0.95
CB 750	24	0.95
CB 950	24	0.95
HC 850	25	0.98
BC 2100	25	0.98
MG 800	24	0.95

[1] Phased-out models





Mounting group - MTG 08 (9)

MB 1200/1500/1650 · EC 120/135/140 · VC 1400/2000 · ER 650/1500/1700 · ERC 250/600/ ERC 650 · ER 1500/2000 L · ADU 1500/2000 · CC 1600/2300 · CB 2500 · DP 1820/2320/2000 · BP 1650/2050 · HM 1500/2000 · HC 1050 · BC 2500 · MG 1000/1500/1800

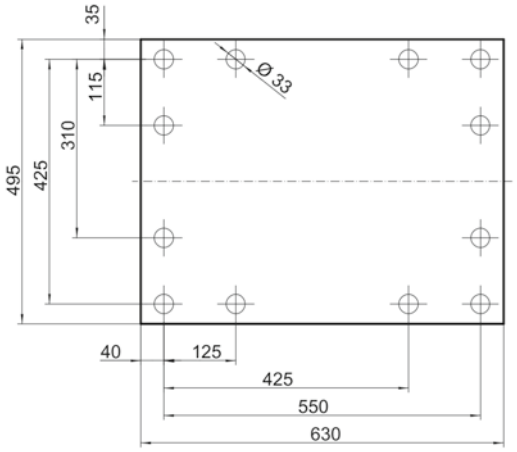

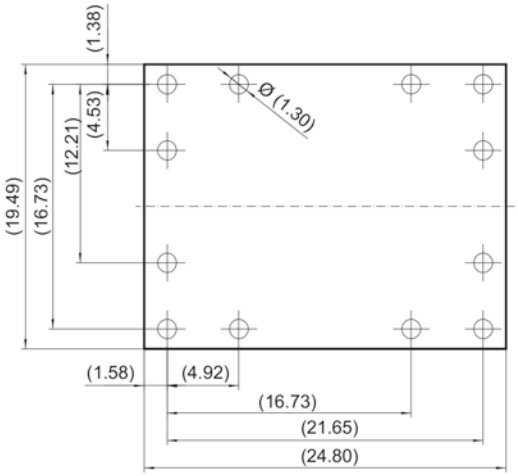





Thickness top plates

Type	mm	inch
MB 1200	47	1.85
MB 1500	47	1.85
MB 1600[1]	30	1.18
MB 1650	47	1.85
MB 1700[1]	47	1.84
EC 120	47	1.85
EC 135	47	1.85
EC 140	47	1.85
VC 1400	27.5	1.08
VC 2000	37	1.46
DC 1200[1]	27.5	1.08
ER 650	27.5	1.08
ER 1500	37	1.46
ER 1700	37	1.46
ERC 250	28	1.10
ERC 600	28	1.10
ERC 250	28	1.10
ERC 600	28	1.10
ERC 650	37	1.46
ER 1500 L	37	1.46
ER 2000 L	37	1.46
ADU 1500	37	1.46
ADU 2000	37	1.46
CC 1600	30	1.18
CC 1700[1]	30	1.18
CC 2300	30	1.18
CB 2500	20	0.79
DP 1820	30	1.18
DP 2320	30	1.18
DP 2000[1]	30	1.18
BP 1650	30	1.18
BP 2050	30	1.18
HM 1500	30	1.18
HM 2000	30	1.18
HC 1050	30	1.18
HC 1055[1]	30	1.18
BC 1500[1]	30	1.18
BC 2250[1]	30	1.18
BC 2500	30	1.18
MG 1000	25	0.98
MG 1500	30	1.18
MG 1800	30	1.18

[1] Phased-out models

Mounting group - MTG 10 (10)

HB 2000/2500 · EC 150/155 · VC 2000/3000 · ER 1500/1700/2000/3000 · ERC 650/1500/1700/2000/3000 · ER 1500/2000 L · ADU 1500/2000 · CC 3100 · DP 3220/2800 · BP 3050 · BC 3700 · MG 2300/2700/3000 · SC 2500

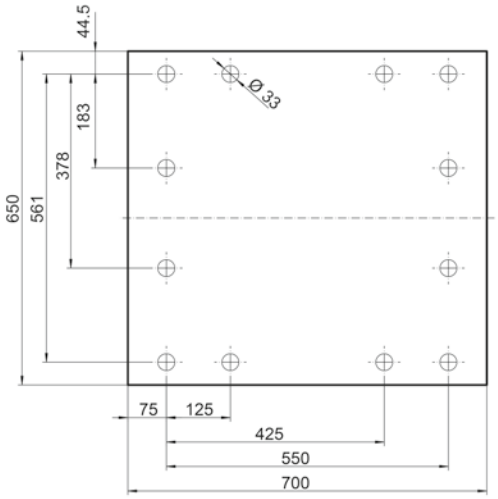

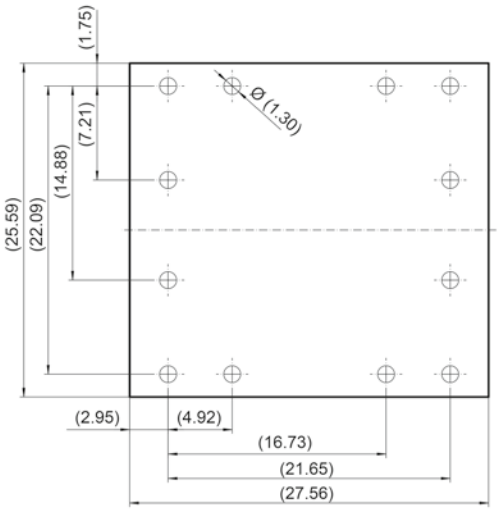





Thickness top plates

Type	mm	inch
HB 2000	47	1.85
HB 2200[1]	47	1.85
HB 2500	47	1.85
EC 150	47	1.85
EC 155	47	1.85
VC 2000	37	1.46
VC 3000	37	1.46
DC 2000[1]	37.5	1.48
DC 2100[1]	37.5	1.48
DC 2900[1]	37.5	1.48
ER 1500	37	1.46
ER 1700	37	1.46
ER 2000	37	1.46
ER 3000	37	1.46
ERC 650	37	1.46
ERC 1500	37	1.46
ERC 1700	37	1.46
ERC 2000	37	1.46
ERC 3000	37.5	1.48
ER 1500 L	37	1.46
ER 2000 L	37	1.46
ADU 1500	37	1.46
ADU 2000	37	1.46
CC 2500[1]	30	1.18
CC 3100	30	1.18
DP 3220	30	1.18
DP 2800[1]	30	1.18
BP 3050	30	1.18
BC 3500[1]	30	1.18
BC 3700	30	1.18
BC 4900[1]	30	1.18
MG 2300	30	1.18
MG 2700	30	1.18
MG 3000	30	1.18
SC 2500	33	1.3

[1] Phased-out models

Mounting group - MTG 14 (11)

HB 3100/3600/4100/4700 · EC 165/180 · CC 3700/5000 · CB 4500/5500 · DP 4220 · BP 4050 · BC 5300 · SC 3600/4500

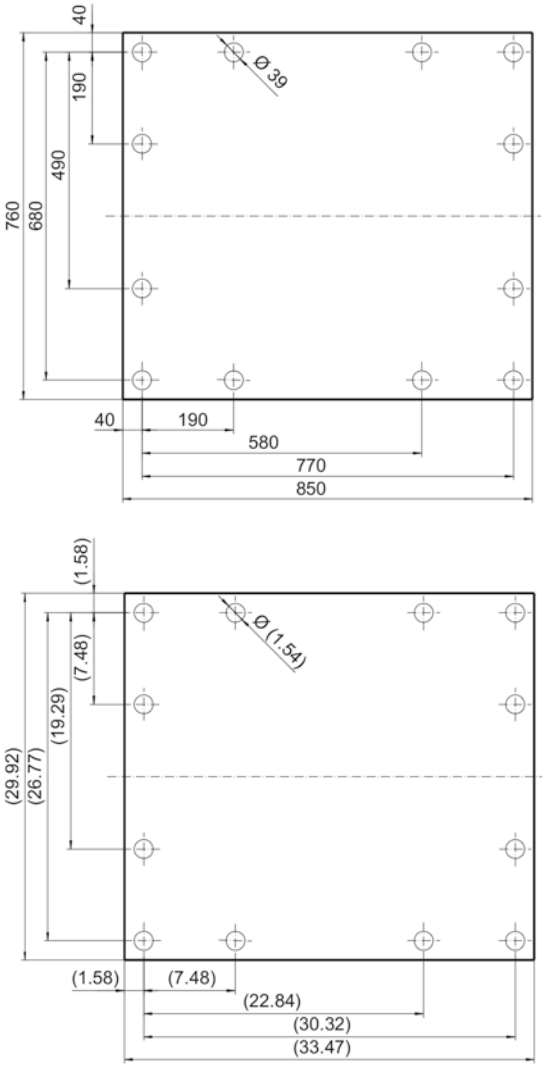

Thickness top plates

Type	mm	inch
HB 3100	50	1.97
HB 3600	50	1.97
HB 4100	50	1.97
HB 4700	50	1.97
EC 165	50	1.97
EC 180	50	1.97
CC 3700	30	1.18
CC 4700[1]	35	1.38
CC 5000	25	0.98
CB 4500	25	0.98
CB 5500	25	0.98
DP 4220	25	0.98
BP 4050	25	0.98
BC 5300	40	1.58
SC 3600	38	1.5
SC 4500	38	1.5

[1] Phased-out models





Mounting group - MTG 12 (12)

HB 3000/4200 · CC 3300

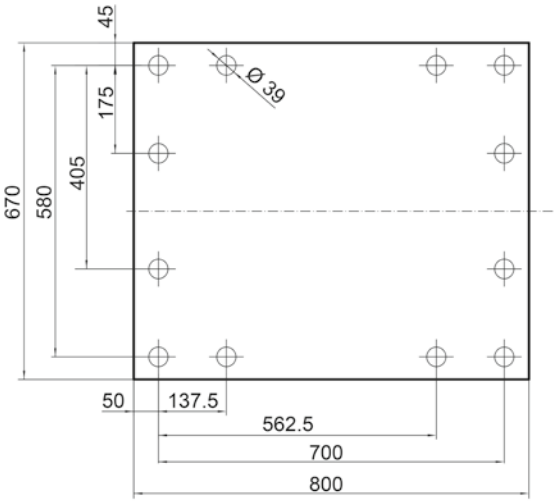

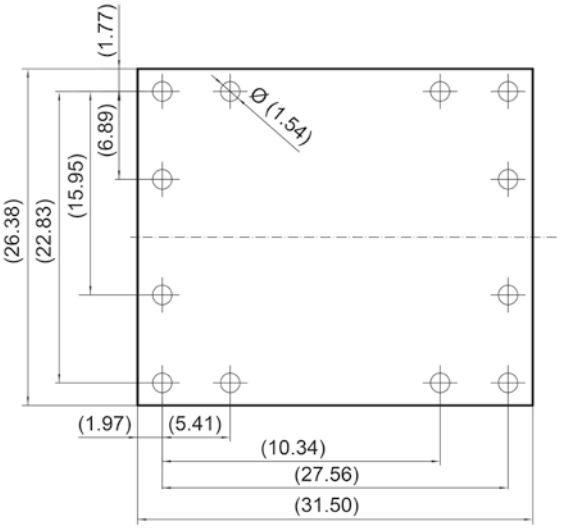

Thickness top plates

Type	mm	inch
HB 3000[1]	50	1.97
HB 4200[1]	50	1.97
CC 3300[1]	30	1.18

[1] Phased-out models





Mounting group - MTG 16 (13)

HB 5800

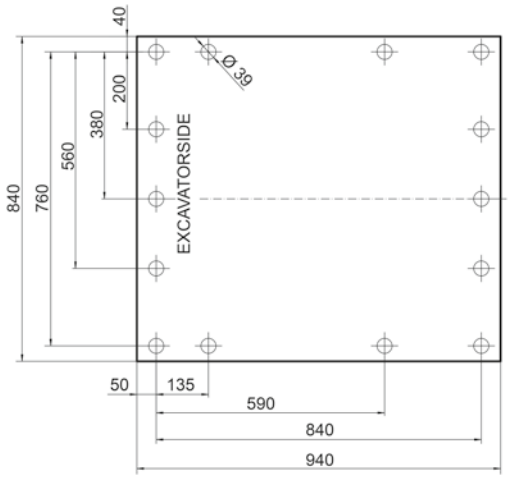

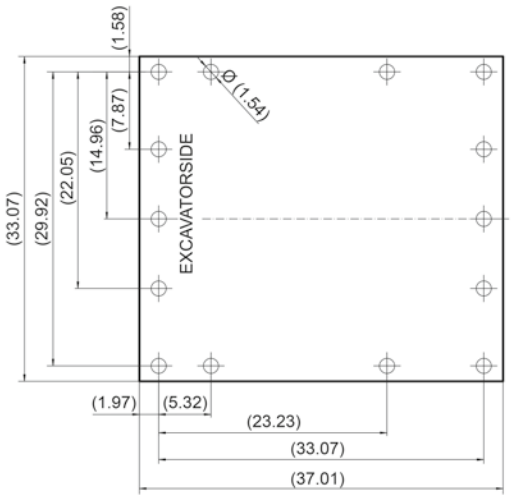

Thickness top plates

Type	mm	inch
HB 5800	50	1.97



Mounting group - MTG 18 (14)

HB 7000 · ER 4000/5500 · CC 7000 · CB 7500 · MG 5000 · SC 6200

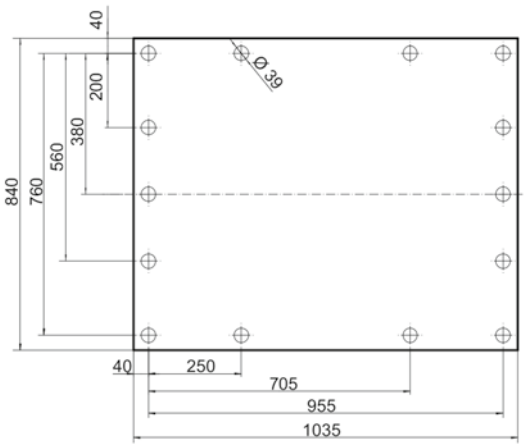

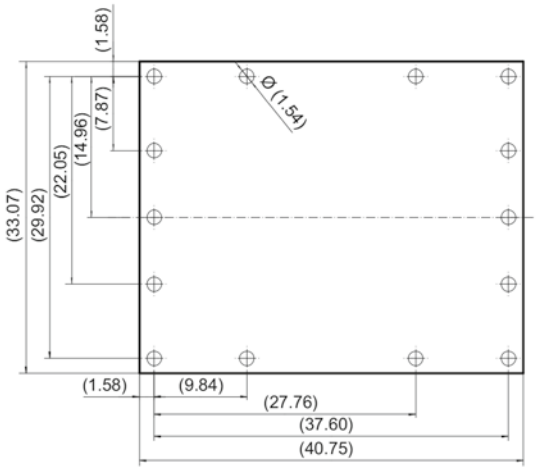

Thickness top plates

Type	mm	inch
HB 7000	50	1.97
ER 4000	47	1.85
ER 5500[1]	47	1.85
CC 6000[2]	35	1.38
CC 7000	30	1.18
CB 7500	30	1.18
MG 5000	35	1.38
SC 6200	38	1.5

[1] Up from 6/2021, as of SN DGR555490
[2] Phased-out models



Mounting group - MTG 20 (15)

HB 10000 · SC 8300

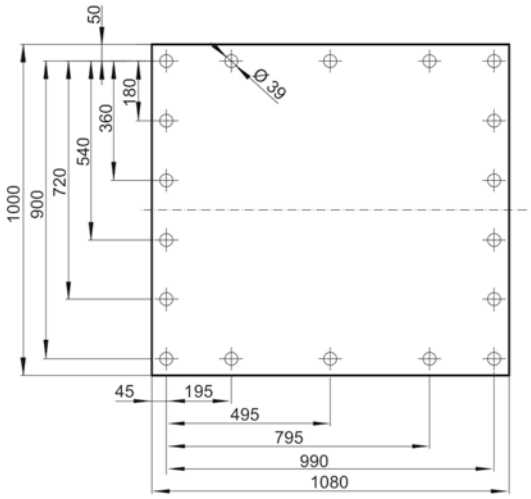

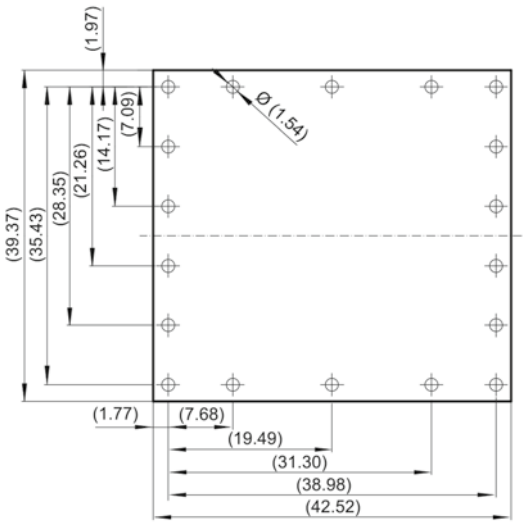

Thickness top plates

Type	mm	inch
HB 10000	50	1.97
SC 8300	48	1.89





Mounting group - MTG 02 (16)

EC 40/50 · HC 150

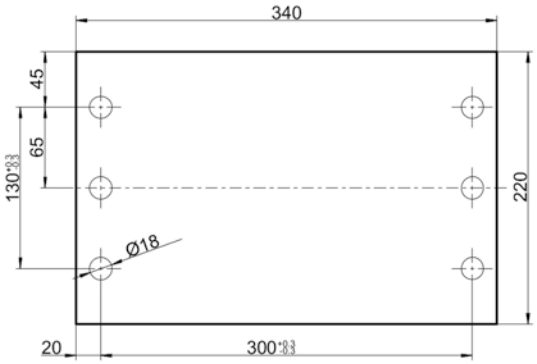

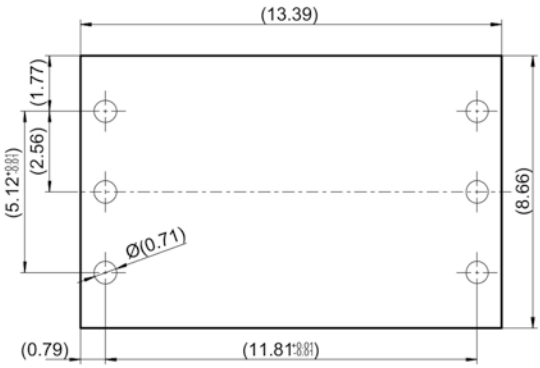

Thickness top plates

Type	mm	inch
EC 40	15	0.59
EC 50	15	0.59
PB 110[1]	15	0.59
PB 160[1]	15	0.59
HC 150	16	0.63

[1] Phased-out models





Mounting group - MTG 04 (17)

EC 60/70/80 · ER 50/100 · ERC 50/100 · ER 100 L · ADU 100 · HC 350/450

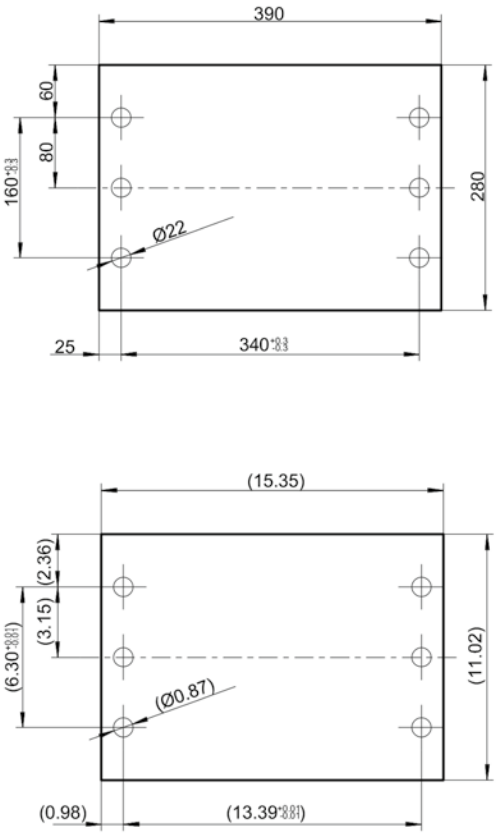

Thickness top plates

Type	mm	inch
EC 60	20	0.79
EC 70	25	0.98
EC 80	25	0.98
PB 210[1]	20	0.79
PB 310[1]	25	0.98
PB 420[1]	25	0.98
ER 50	17.5	0.69
ER 100	17.5	0.69
ERC 50	24	0.94
ERC 100	17.5	0.69
ER 100 L	17.5	0.69
ADU 100	17.5	0.69
HC 350	20	0.79
HC 450	20	0.79

[1] Phased-out models





Mounting group - SB 1102 (18)

SB 1102

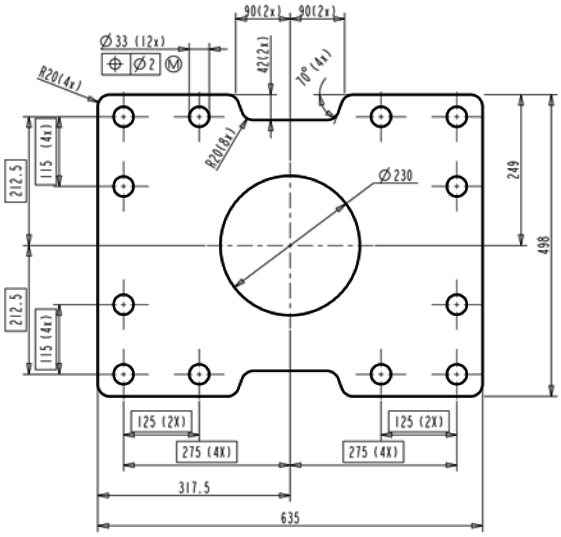

Thickness top plates

Type	mm	inch
SB 1102	44 (8 x)	1.73 (8 x)
SB 1102	47 (inner, 4x)	1.85 (inner, 4x)



Mounting group - SC 270 (19)

SC 270

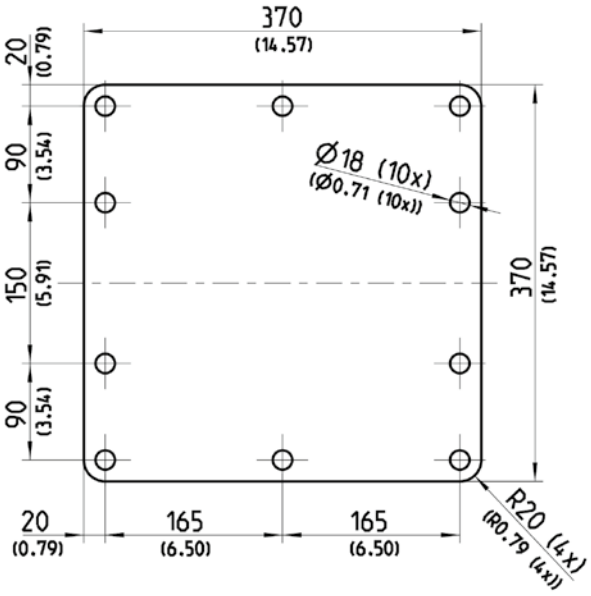

Thickness top plates

Type	mm	inch
SC 270	25	0.98



Mounting group - SC 600 (20)

SC 600

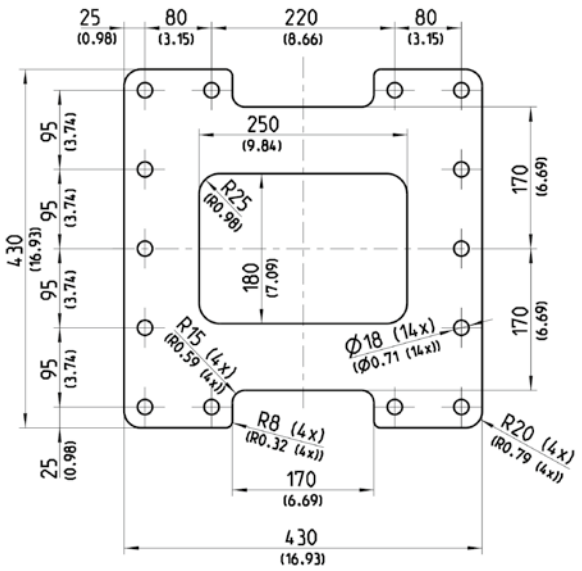

Thickness top plates

Type	mm	inch
SC 600	25	0.98



Mounting group - MTG 21 (21)

ERL 700/1100

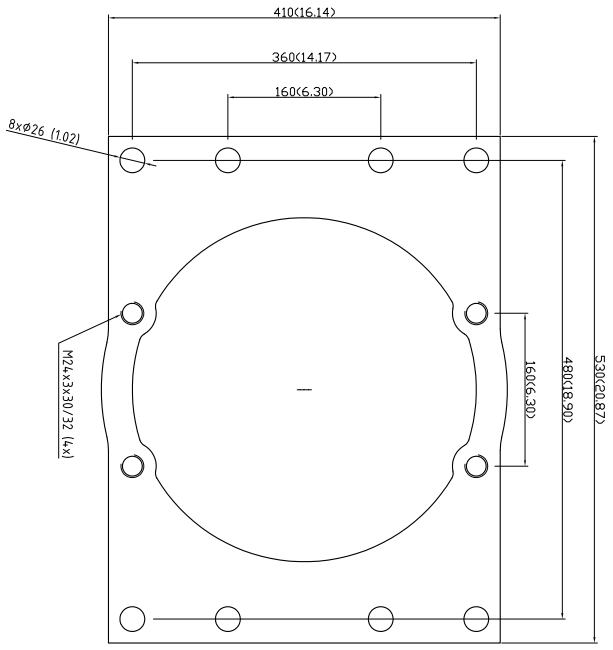

Thickness top plates

Type	mm	inch
ERL 700	28	1.10
ERL 1100	28	1.10





Mounting group - MTG 22 (22)

BS 1600

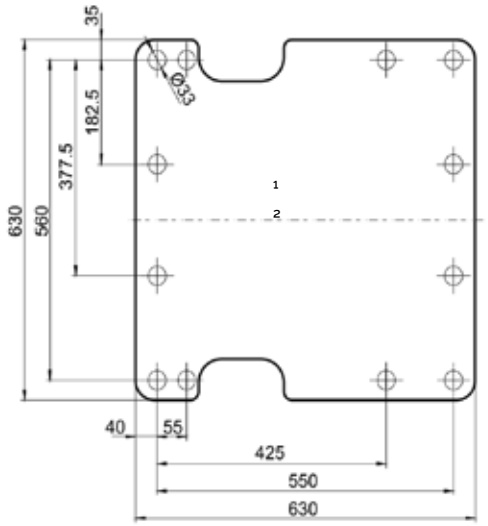

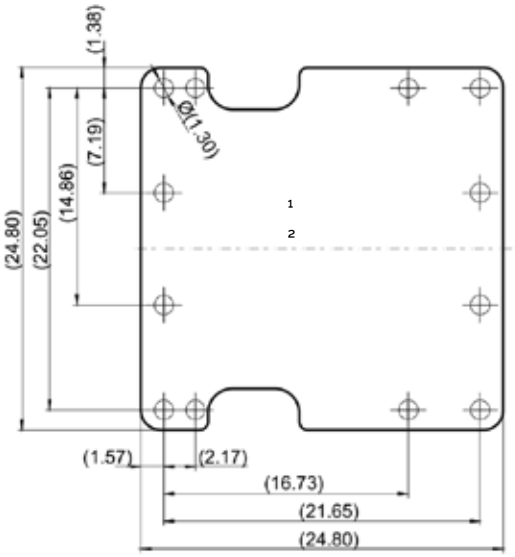

Thickness top plates

Type	mm	inch
BS 1600	30	1.18



Mounting group - MTG 23 (23)

BS 2200

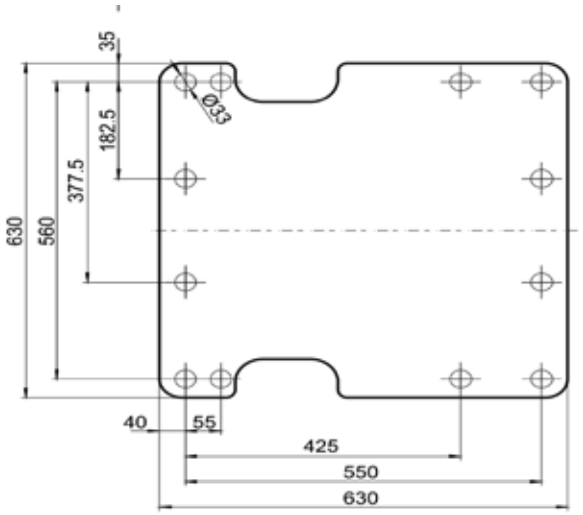

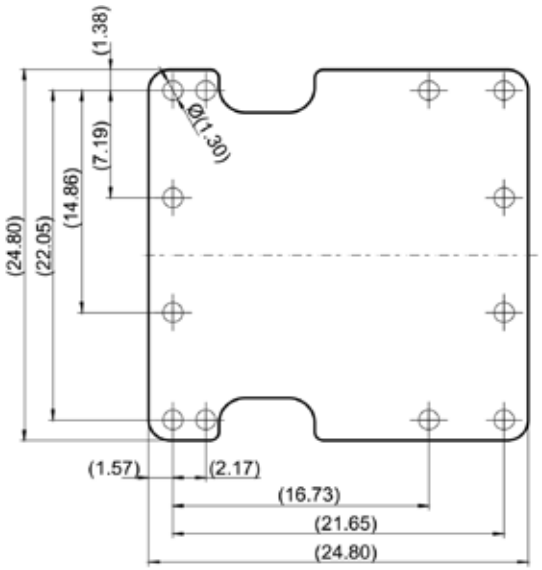

Thickness top plates

Type	mm	inch
BS 2200	30	1.18



Kinematic data sheet

Manufacturer	
Year of manufacture	
Type	
Stick type	

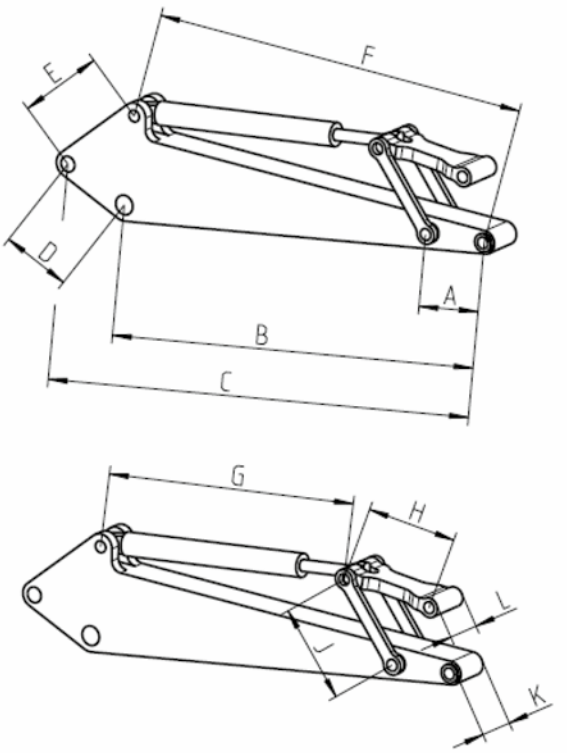

	mm	inch
A		
B		
C		
D		
E		
F		
G¹		
G²		
H		
J		
K		
L		

G¹ cylinder retracted
G² cylinder extended

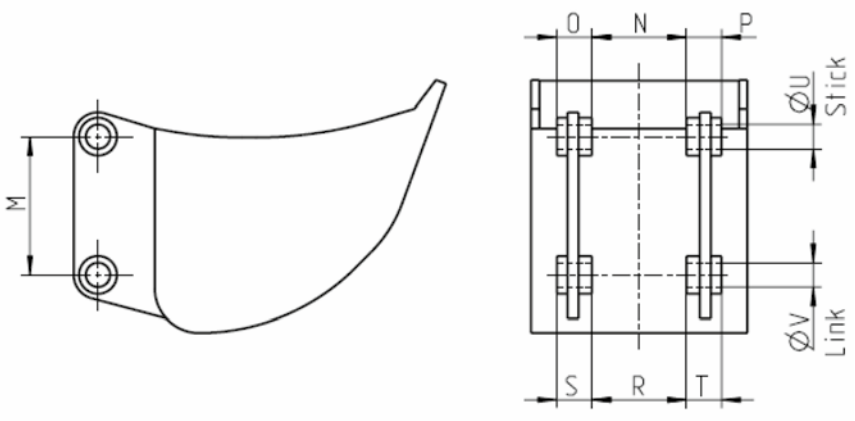

	mm	inch
M		
N		
O		
P		
R		
S		
T		
ØU		
ØV		

Different pin retainers

Manufacturer	
Year of manufacture	
Type	
Stick type	

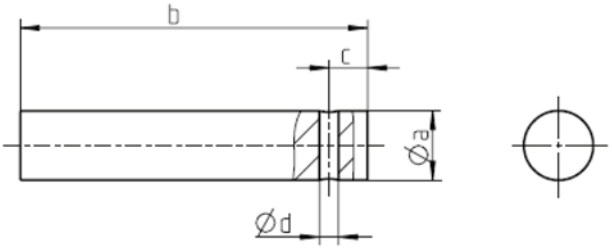

Version 1

☐ mm ☐ inch

	Stick	Link
a		
b		
c		
d		

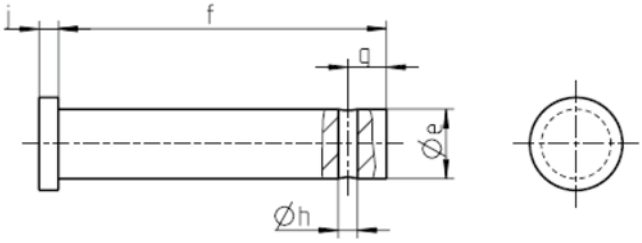

Version 2

☐ mm ☐ inch

	Stick	Link
e		
f		
g		
h		
i		

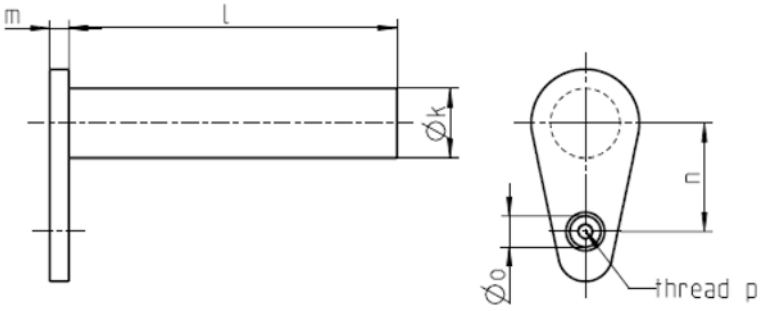

Version 3

☐ mm ☐ inch

	Stick	Link
k		
l		
m		
n		
o		
p		

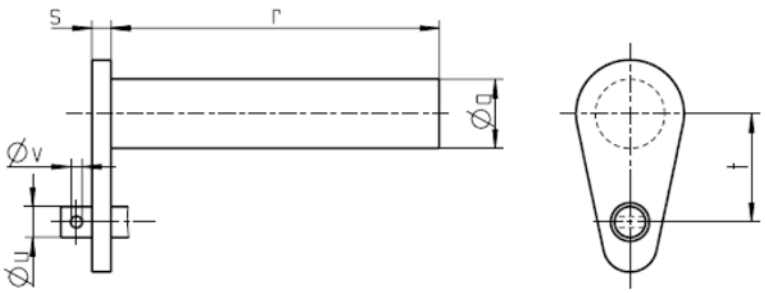

Version 4

☐ mm ☐ inch

	Stick	Link
q		
r		
s		
t		
u		
v		

Different pin retainers

Manufacturer	
Year of manufacture	
Type	

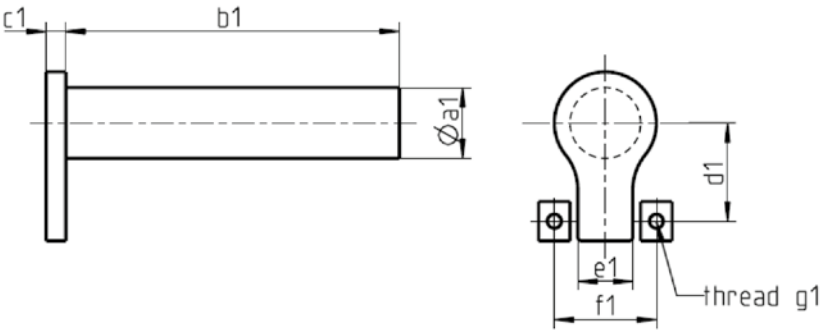

Version 5

☐ mm ☐ inch

	Stick	Link
a1		
b1		
c1		
d1		
e1		
f1		
g1		

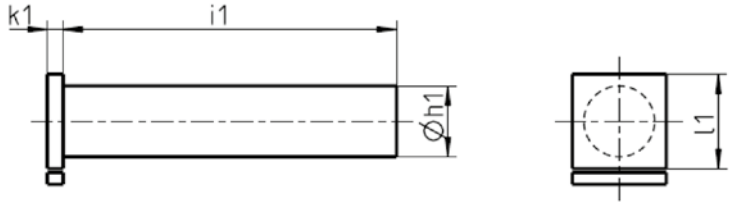

Version 6

☐ mm ☐ inch

	Stick	Link
h1		
i1		
k1		
l1		

Space for a sketch

Date	
Name	

facebook.com/epirocdemolition

facebook.com/epirocgroup

twitter.com/epirocgroup

instagram.com/epirocgroup

linkedin.com/company/epiroc

United in performance. Inspired by innovation.

Performance unites us, innovation inspires us, and commitment drives us to keep moving forward. Count on Epiroc to deliver the solutions you need to succeed today and the technology to lead tomorrow.

epiroc.com

9864 0024 93 2025-02 Essen, Germany Legal Notice © Copyright 2025, Epiroc Construction Tools GmbH, Essen, Germany. All product names in this publication are trademarks of Epiroc. Any unauthorized use or copying of the contents or any part thereof is prohibited. Illustrations and photos may show equipment with optional extras. No warranty is made regarding specifications or otherwise. Specifications and equipment are subject to change without notice. Consult your Epiroc Customer Center for specific information.