Boomer S10 S

The world's first RCS equipped one-boom small segment jumbo, suitable for small size drifts up to 40 m²

Epiroc

Quality assured mining and tunneling

Boomer S10 S is the world's first one-boom small segment jumbo to feature Epiroc's Rig Control System, RCS 5. This gives numerous operator assisting benefits with the ability to utilize digital drill plans, autonomous funcionality and teleremote drilling.

Main benefits

Quality assured results with the ability to use digital drill plans, high precision navigation and analytics data thanks to Epiroc's Rig Control System

Major cost savings per development meter by utilizing the High Performance Development optimization method and digital drill plans

Safe productivity with less scaling, improved tunnel quality, minimized cracks and less need for rock reinforcement – all resulting in significant live work reduction

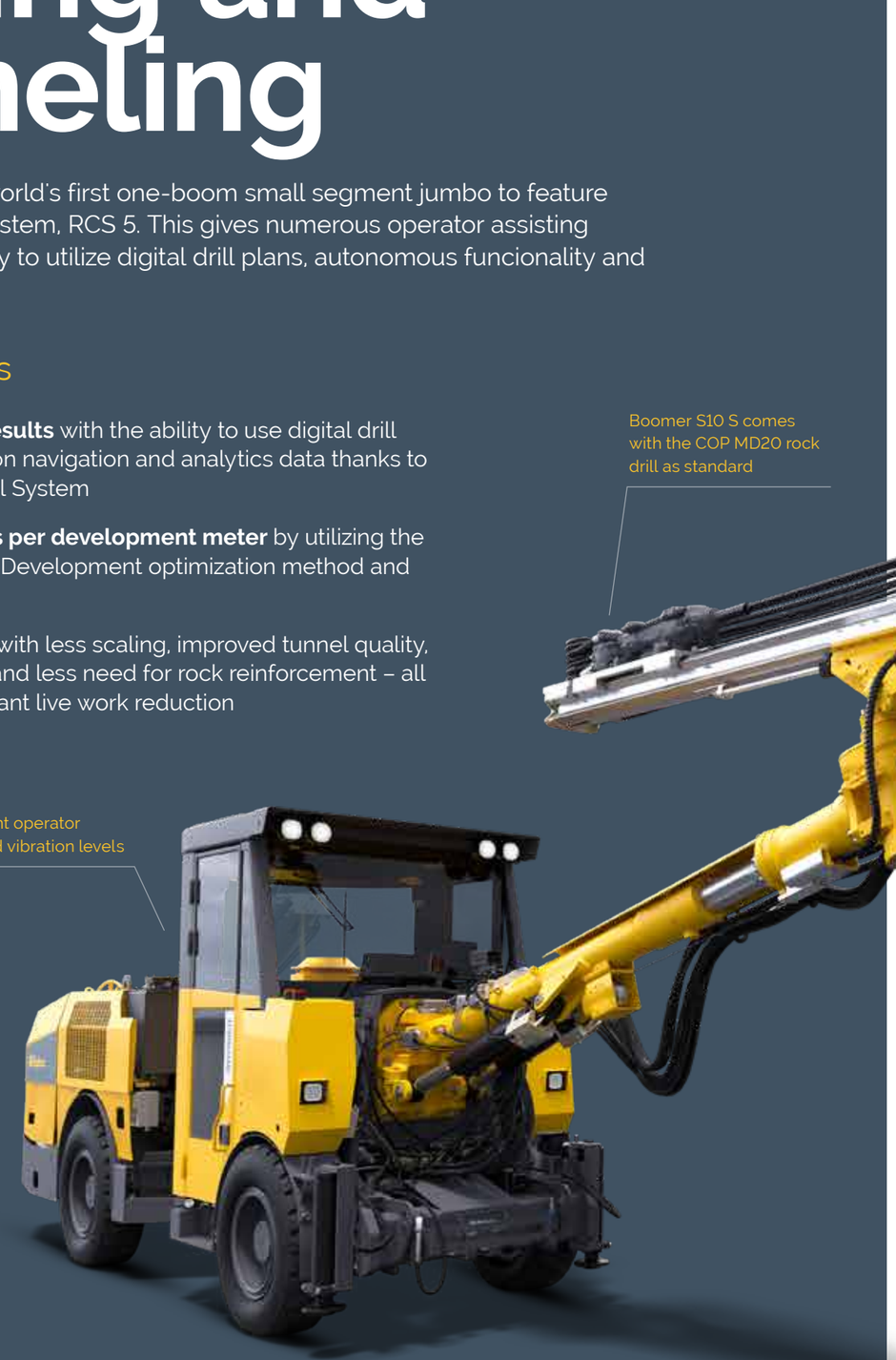

Optimal comfort in the enclosed cabin with reduced noise and vibration levels (<75 dB).

Optimal selection for drilling tools includes the well-proven COP MD20 rock drill and the Powerbit Trubbnos drill bit.

Decrease the positioning time between holes with the BUT S boom, proven to give 6% lower running costs compared to the previous BUT 29 boom.

RCS

Epiroc's Rig Control System was first implemented in 1998. The system is used for controlling several vital functions in Epiroc's machines. It is also an enabler for several productivity increasing, efficiency boosting and cost saving automation features.

Improved safety and lowered costs

Epiroc's Rig Control System is an enabler for automation features that improve your mining operation's productivity and at the same time lowering costs.

+ Operator safety and comfort

The multi-functional joysticks on the RCS 5 control panel enables the operator to keep eyes on task at all times, improving safety for everyone in the mine. The closed cabin of Boomer S10 S features low noise and vibration levels, ensuring a comfortable working environment for the operator. The cabin also features improved visibility compared to previous cabin designs.

+ Major cost savings with High Performance Development

High Performance Development is a mining and tunneling cycle optimization method that makes the entire operation more time and cost efficient and ensures quality-approved results by implementing proven and value adding options and ways of working. Partnering with Epiroc in a High Performance Development project will increase productivity in your mining operations and at the same lower your costs.

+ ABC Regular and ABC Total - autonomous drilling

Compared to manual marking of the face and positioning the boom, ABC Regular ensures a much better end result. Digital drill plans also means significant time savings. ABC Total enables both full automation and semi automation, meaning that the operator can take over the drilling at any time. The difference from ABC Regular is that with ABC Total several booms can drill simultaneously. Drill sequences used with ABC Total can be created/edited either in Underground Manager or on the display in the cabin.

A comprehensive service offering

Even the best equipment needs to be serviced regularly to make sure it sustains peak performance. An Epiroc service solution offers peace of mind, maximizing availability and performance throughout the lifetime of your equipment. We focus on safety, productivity and reliability.

By combining genuine parts and an Epiroc service from our certified technicians, we safeguard your productivity – wherever you are.

Technical specifications

● = Standard ○ = Option

Drilling system

COP MD20	●
COP 1638HD+	○
COP 1838HD+	○
COP 2238HD+	○
Water mist flushing, external water and air supply (water or air oil cooler)	○
Water mist flushing, internal air and external water	○
Rock drill air filtration system	○
Internal water mist flushing system with 250 l water tank	○
Hole blowing kit	●
Big hole drilling system	●

Boom

BUT S	●
Automatic boom lubrication kit (rear part of the boom)	●
Boom suspension system	○

Feed

BMH 2825, drill steel length 2 500 mm	○
BMH 2831, drill steel length 3 090 mm	○
BMH 2837, drill steel length 3 700 mm	○
BMH 2840, drill steel length 4 000 mm	○
BMH 2843, drill steel length 4 310 mm	○
BMH 2849, drill steel length 4 920 mm	○
Telescopic feed BMHT 2000-series (max 4.3 m)	○
Extension drilling set	○
Bulk head style hose tree on feeds	●
Mining (heavy-duty) centralisers	○

Air/water system

Hydraulic water booster pump capacity at 12 bar, 66 l/m	●
Compressor: Epiroc GAR30*	○
Compressor: Epiroc LE7	●
Water hose reel, including water hose	○

* 95 kW powerpack is required

Hydraulic system

Low oil level indicator	●
Oil temperature meter	●
Filtration 16 µm	●
Oil filter indicator	●
Mineral hydraulic oil	●
Electric oil filling pump	●
Water/oil cooler	●
Air/oil cooler	○
Hydraulic oil thermostat	●
Heater for hydraulic oil tank	○
Ni-Cr plated piston rods (limitations exist)	○

Electrical system

Total installed power 59 kW* (main motors 1x55 kW)	●
Total installed power 79 kW* (main motors 1x75 kW)	○
Total installed power 99 kW (main motors 1x95 kW)	○
Voltage 380-1 000 V	●
Frequency 50 Hz or 60 Hz	○
Starting method star/delta 380–690 V, direct start 1000 V	●
Starting method – soft start (not for 1000 V)	○
Transformer 5 kVA (4 kVA North America)	●
Electronic overload protection for electric motors	●
Percussion hour meter	●
Digital volt/ampere meter in electrical cabinet	●
Phase sequence and eart fault indicator	●
Battery charger	●
Dual controls for reels	●
Trailing cable	○
Plug PC4/PC5	○

* Larger powerpacks is required at high altitude or with certain options

Carrier

Deutz D914 L04, Stage IIIA, 55 kW	●
Deutz TD 3.6 L04, Stage V, 55 kW	○
Deutz BF4L 914, Stage II, 72 kW	○
Deutz TCD 3.6 L04, CN4, 60 kW	○
Articulated ±40° steering angle	●
Four wheel drive	●
Electrical system 24 V	●
Batteries 2x12 V, 70 Ah	●
Working lights, 4x8000 Lumen 24V LED	●
Tramming lights, 4x1400 Lumen + 2x8000 Lumen 24 V LED	●
Illuminated stairs	○
Automatic differential lock on front axle	●
Tires, 9.00xR20	●
Clearance outside axles rear 17,5°	●
Front and rear hydraulic jacks	●
Fuel tank volume, 4 Cylinder engine: 60 l	●
Fire suppression system ANSUL	○
Manual lubrication kit	○
Rig washing kit	○
Boot washing kit	○
Diesel engine heater for liquid cooled engines	○

Control system

Rig Control System (RCS 5)	●
Advanced Boom Control (ABC) Regular	●
Advanced Boom Control (ABC) Total	○
Measure While Drilling (MWD)	○
Underground Manager PRO (PC software)	●
Underground Manager MWD (PC software) for analysis of drill data	○
Underground Manager PRO Team Server (PC software)	○
Underground Manager MWD Team Server (PC software) for analysis of drill data	○
Bolt view	●
Rig Remote Access (RRA)	○
Total station navigation	○
Dynamic Tunneling Package (DTP)	○
Drill stop 2.0*	○
Boom isolation**	○
Max power consumption	○

* Mandatory in CE
** Requires Drill stop 2.0

Technical specifications

● - Standard ○ - Option

Cabin (optional)

ROPS and FOPS certified air conditioned cabin, noise level <75 dB(A)	●
Spotlight 1 500 Lumen LED 24 V	○
Air condition, cooling only	●
12 V outlet	●
Media player	○
Swingable seat	○
Protection bars	○
Reversing camera	○
Low built cabin (seated only), 2 650 mm height	○

Protective roof

12 V outlet	●
Swingable seat for drilling and tramming	○
Spotlight 1 500 Lumen LED 24 V	○

Drill rods

Dimension	Minimum hole diameter
R38-H35-R32	45 mm
R38-H35-SR35 Speedrod	45 mm
T38-H35-R32	45 mm
T38-H35-R32 Speedrod	45 mm
T38-H35-SR35	45 mm
T38-H35-R35	48 mm
T38-H35-R35 Speedrod	48 mm
T38-R39-R35	48 mm
T38-R39-SR35	45 mm
T38-R38-R35	48 mm

Extension rods for injection drilling/RAS

Dimension	Minimum hole diameter
R32 Speedrod	51 mm
T38 Speedrod	64 mm

Shank adapters

Thread	Diameter	Length
R38	38 mm	435 mm
T38	38 mm	435 mm
R32	38 mm	525 mm
T38	38 mm	525 mm

Couplings

Thread	Diameter	Length
R38	55 mm	170 mm
T38	55 mm	190 mm

Recommended cable sizes and lengths (59kW)

Voltage	Dimension, mm²	Diameter, mm	Length, m
380-400 V	3x50+3G10+2x1.5	33	150
440 V	3x50+3G10+2x1.5	33	150
500-525 V	3x35+3G6+2x1.5	29	200
550-575 V	3x35+3G6+2x1.5	29	200
660-690 V	3x35+3G6+2x1.5	29	200
1 000 V	3x35+3G6+2x1.5	29	200

Recommended cable sizes and lengths (79 kW)

Voltage	Dimension, mm²	Diameter, mm	Length, m
380-400 V	3x70+3G16+2x1.5	39	110
440 V	3x70+3G16+2x1.5	39	110
500-525 V	3x70+3G16+2x1.5	39	110
550-575 V	3x50+3G10+2x1.5	33	150
660-690 V	3x35+3G6+2x1.5	29	200
1 000 V	3x35+3G6+2x1.5	29	200

Recommended cable sizes and lengths (99 kW)

Voltage	Dimension, mm²	Diameter, mm	Length, m
380-400 V	3x95+3G16+2x1.5	39	80
440 V	3x95+3G16+2x1.5	39	80
500-525 V	3x70+3G16+2x1.5	39	110
550-575 V	3x70+3G10+2x1.5	39	110
660-690 V	3x50+3G10+2x1.5	33	150
1 000 V	3x35+3G6+2x1.5	29	200

Noise and vibration

Operator sound pressure level in cabin, drilling, free field (ISO 11201)	75±3 dB(A) re 20 uPa
Operator sound pressure level working close to machine, drilling, free field	103±6 dB(A) re 20 uPa
Sound power level (ISO 3747), drilling, free field	123 dB(A) re 1 pW
Peak C-weighted instantaneous sound pressure level (EN16228)	Less than 130 dB
Vibration levels seated, drilling (ISO 2631-1) cabin	0.07±0.07 m/s^2
Vibration levels seated, drilling (ISO 2631-1) canopy	0.15±0.15 m/s^2
Vibration levels standing, drilling (ISO 2631-1) cabin	0.07±0.07 m/s^2
Vibration levels standing, drilling (ISO 2631-1) canopy	0.15±0.15 m/s^2

Technical specifications

Dimensions in millimeters

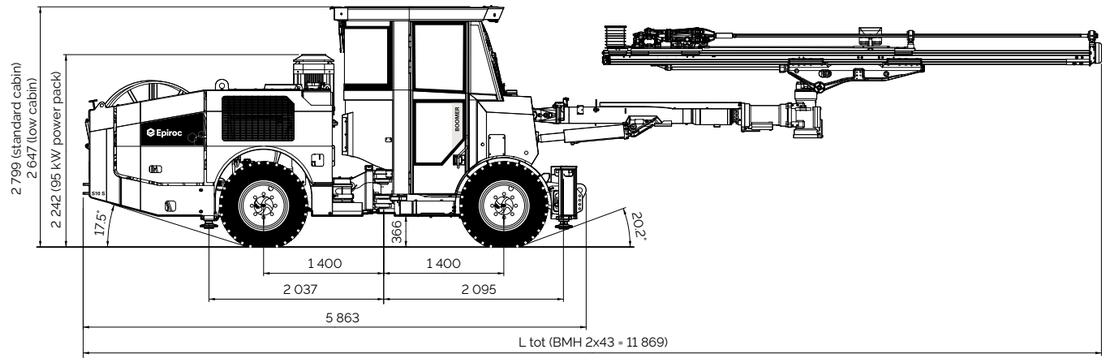

Illustration shows Boomer S10 S equipped with COP MD20 rock drill, BUT S boom and BMH 2749 feed.

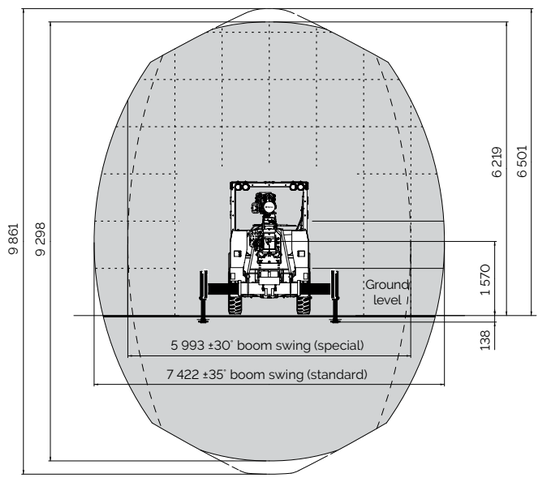

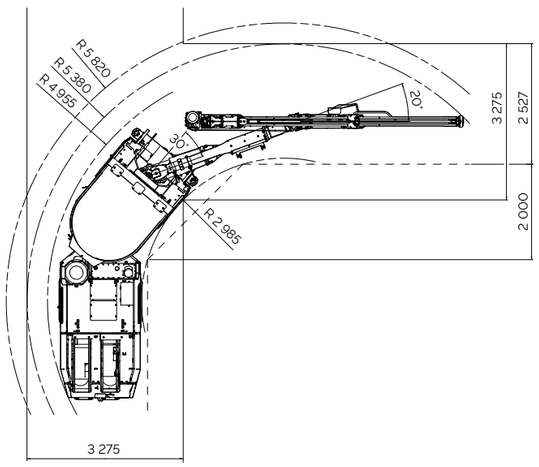

Dimensions

Width	1 750 mm
Height, roof down	2 128 mm
Height, roof up	2 828 mm
Cabin height (option)	2 799 mm
Length, tramming	11 869 mm BMH 2x43
Ground clearence	366 mm
Turning radius outer/inner (BMH2843)	4 955/2 985 mm

Weight

Total	12 800 kg
Boom side	8 350 kg
Engine side	4 500 kg

*Empty water tank

Tramming speed

On flat ground (rolling resistance 0.05)*	>15 km/h
On incline 1:8	>5 km/h

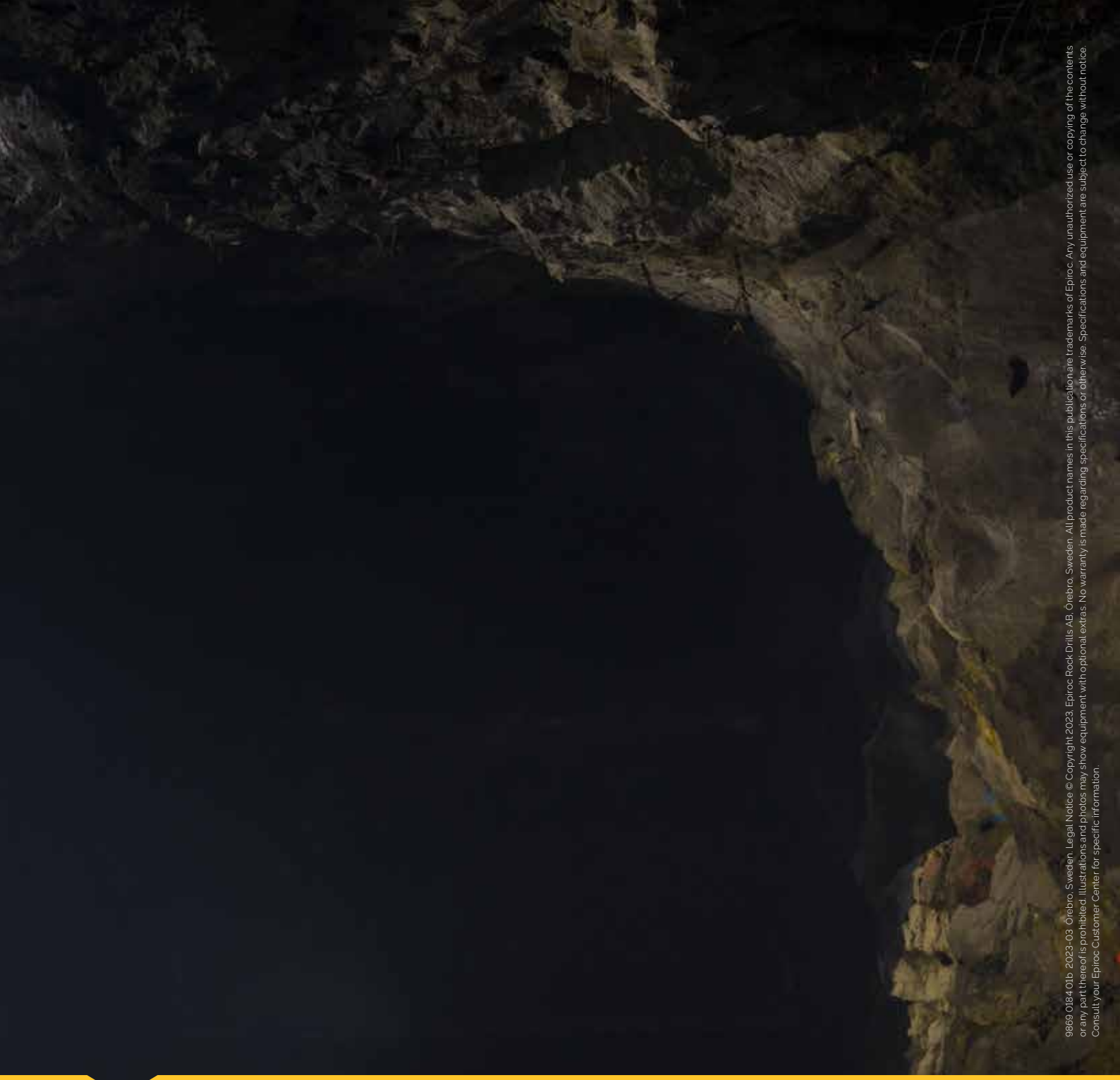

United in performance. Inspired by innovation.

Performance unites us, innovation inspires us, and commitment drives us to keep moving forward. Count on Epiroc to deliver the solutions you need to succeed today and the technology to lead tomorrow.

epiroc.com

Epiroc