Simba E70 S

Smart and Green series

Production drill rig for medium to large sized drifts with a hole range of 51 to 178 mm

The obvious next step in production drilling

The improved Simba E70 S continues to be the choice in medium to large sized drifts, with a hole range of 51 to 178 mm. The boom-mounted configuration makes for excellent flexibility while the automation features bring optimization opportunities. With a proposed step-by-step optimization program under the 6th Sense umbrella, it is the obvious next step in production drilling.

Main benefits

Utilization and effectiveness thanks to a wide range of automation options, boosted by high performance drill consumables such as the Powerbit X drill bit

Excellent drilling quality with the new tube drilling system ET-51 which creates a balanced setup that mitigates in-hole-deviation

Focus on safety and live work reduction with control system based electrics, opening up for higher degree of autonomous operation

Updated carousel with more robust rod handling, new worm gear, improved gripper arms and upgraded cylinders in the drill steel support

Four mounted stingers for a rock solid set up for drilling

New hydraulic box with improved sealing to prevent water entrance, overall resulting in better serviceability.

New touch screen and centralized buttons give the operator a better overview. The CCS (Carrier Control System) means increased effectiveness and is an enabler for future automation development.

The carousel on the Simba E70 S rig has received a facelift compared to its predecessor. This improvement includes a new three-way cylinder replacing the hydraulic motor, improved material for the gripper arms and a new design for the drill steel grippers. The new drill steel support cylinders secure a solid grip when adding/removing drill steel during drilling.

BUT 45 heavy-duty boom for direct, fast and accurate positioning between holes

Excellent visibility and operator safety with a ROPS and FOPS certified cabin

Available with optional zero-emission battery-electric driveline

S – Smart
Machines within the Smart series are equipped with Epiroc's Rig Control System, RCS, which makes them ready for automation and remote control. RCS also provides a foundation for additional functionality from our 6th Sense offering.

G – Green
The Green series includes machines that create more sustainable operations thanks to a battery-electric driveline.

SG – Smart and Green
Smart and Green means that machines feature both Epiroc's Rig Control System and zero-emission technologies.

Precise production drilling with higher consistency

The Simba E70 S is the latest upgrade in the Simba range with a clear focus on remote and autonomous control. Putting vehicle electrics under control systems enables a higher degree of machine automation. All improvements on the Simba E70 S aim towards autonomous operations.

+ Safety

Operator safety is always a top priority, and on the Simba E70 S this has been improved by a higher degree of automation. Live work around energized parts is minimized and the operator becomes more of a process operator.

+ Carrier Control System - enabler for automation

The entire machine is now managed via control systems, making all the automation features available to combine. When blended together, a higher percentage of tasks can be performed autonomously.

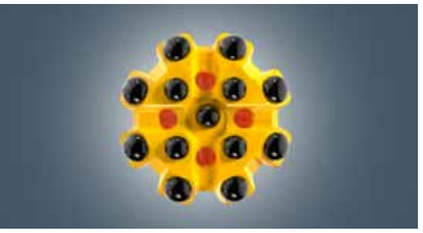

+ Quality boosting consumables

The Powerbit X drill bit range together with the newly developed ET-series tubes (Epiroc Tubes) highly contribute to increasing the overall hole quality and effectiveness. Straighter drilling, longer service life and easier service planning make the ET-series the obvious next step towards higher quality drilling.

A comprehensive service offering

Even the best equipment needs to be serviced regularly to make sure it sustains peak performance. An Epiroc service solution offers peace of mind, maximizing availability and performance throughout the lifetime of your equipment. We focus on safety, productivity and reliability.

By combining genuine parts and an Epiroc service from our certified technicians, we safeguard your productivity – wherever you are.

Technical specifications

● = Standard ○ = Option
A = Simba E70 S **B** = Simba E70 S ITH **C** = Simba E70 SG **D** = Simba E70 SG ITH

Drilling system	A	B	C	D
COP 1838+	○		○	
COP 1838MUX+, COP 1838HUX+	○		○	
COP 2550UX+	○		○	
COP 3060MUX	○		○	
COP 44 to COP 64		○		○
Dry drilling system	○			
Bit changer, only with MUX/HUX/UX	○		○	
Water mist flushing, external water and air supply (hydraulic oil cooled by water cooler)	○	●	○	●
Water mist flushing, external water and air supply (hydraulic oil cooled by air fan)	○		○	
Hole blowing kit	○		○	
Rock drill lubrication warning kit	●		●	
Thread lubrication kit	○	○	○	○

Boom/drilling unit	A	B	C	D
BUT 45 PDS	○	○	○	○
BUT 45 PDL	○	○	○	○
Rod Handling System, RHS 17 (17+1 rods) mechanized drilling up to 30 m	○		○	
Rod Handling System, RHS 27 (27+1 rods) mechanized drilling up to 51 m	○	○	○	○
Rod Handling System, RHS 35 (35+1 rods) mechanized drilling up to 63 m		○		○
Adaptable to 4', 5' and 6' rods	●		●	
Adaptable to TDS 64, TDS 76, TDS 87 drill rods	○		○	
Adaptable to 76/89/102 ITH pipes		○		○
Adaptable to ET45, ET51, ET55 and ET66	○		○	
2 rear and 2 front stinger	●	●	●	●
Automatic lubrication for positioning unit	○	○	○	○
Central lubrication for drilling and positioning unit	●	●	●	●

Electrical system	A	B	C	D
Total installed drilling power 103 kW (main motors 1x95 kW)*	●		●	
Total installed drilling power 63 kW (main motor 1x55 kW)		●		●
Total installed drilling power 158 kW (main motor 1x95 kW, equipped with booster compressor)		○		○
Total installed drilling power 158 kW (main motors 2x75 kW)**	○		○	
24 V batteries 2x125 Ah	●	●	●	●
Electric system 24 V	●	●	●	●
700 V Battery 280 Ah			●	●
Voltage 400-1 000 V 50/60 Hz	●	●	●	●
Starting method star/delta (400-690 V)	●	●	●	●
Soft start of main electrical motors (not for 1 000 V)	○	○	○	○
Electronic overload protection for electric motors	●	●	●	●
Digial voltmeter/amperage meter in electric cabinet	●	●	●	●
Electric outlet for accessories, 16 A (CE)/32 A (CE)	○	○	○	○
Extra transformer 8 kVA	●	●	●	●
Extra transformer 15 kVA	○	○	○	○
Transformer for charging 100 kW			●	●
PC4 or PC5 plug/socket	○	○	○	○
Phase sequence and eart fault indicator	●	●	●	●
Battery charger	●	●	●	●
Dual controls for cable reel	●	●	●	●
Limit switch for cable reel with signal lamp and brake connection	●	●	●	●
Stainless steel electrical enclosure	○	○	○	○
Carrier Control System	●	●	●	●
Tramming lights 8x22 LED, 2x70 W, 24 V DC	●	●	●	●
Working lights 4x150 LED, 24 V DC	●	●	●	●
Illuminated stairs for platform LED	●	●	●	●

* Depending on selected rock drill.
** Only with COP 3060, or double GAR 30 compressors or when DCT installed.

Hydraulic system	A	B	C	D
Low oil level indicator and shut-down	●	●	●	●
Smart oil leakage shut-down system	●	●	●	●
Oil temperature gauge on oil tank, electronically supervised	●	●	●	●
Hydraulic oil thermostat	●	●	●	●
Water/oil cooler in stainless steel	●	●	●	●
Filtration 16 µm	●	●	●	●
Oil filter indicator	●	●	●	●
Mineral hydraulic oil	●	●	●	●
Electrical oil filling pump	●	●	●	●
Heater kit for hydraulic oil tank, diesel engine and electric motors	○	○		
Heater kit for hydraulic oil tank and electric motors			○	○
Biodegradable hydraulic oil	○	○	○	○
Ni-Cr plated piston rods (limitations exist)	○	○	○	○
Kidney filter	○	○	○	○

Control system	A	B	C	D
Epiroc Rig Control System (RCS)	●	●	●	●
Advanced Boom Control (ABC) Regular	○	○	○	○
Advanced Boom Control (ABC) Total	○	○	○	○
Breaktrough automatic stop	○	○	○	○
Underground manager pro *	○	○	○	○
Drill plan handling *	○	○	○	○
Drill plan handling with raise view *	●	●	●	●
Measure While Drilling (MWD)	○	○	○	○
Void detection	○	○	○	○
Boom alignment laser	○	○	○	○
Automatic parallel holding *	○	○	○	○
Remote cradle control/remote feed control	○	○	○	○
Rig Remote Access (RRA)	○	○	○	○
Mobile tele-remote/multi tele-remote	○	○	○	○
Remote operating kit	○	○	○	○
Additional panel	○	○	○	○
Remote controlled camera on tripod with monitor in cabin	○	○	○	○
Total station navigation	○	○	○	○

* Included in ABC Total

Feed	A	B	C	D
BMH 200-series 3 143 mm, 3 448 mm, 3 753 mm	○		○	
BMH 200-series (extractor) 3 348 mm, 3 653 mm, 3 958 mm*	○		○	
BMH 200-series 3 621 mm, 3 926 mm**		○		○

* +55 mm for COP 2550 UX
** +138 mm for hammer guide

Air system	A	B	C	D
Compressor: Epiroc GAR 5	●		●	
Compressor: Epiroc GAR 30	○		○	
Double GAR 30 compressor +air receiver	○		○	
On-board booster compressor, 25 bar/380 l/s		○		○
External air supply connection for hole blowing	●	●	●	●
HECL lubrication system with electric filling pump		●		●

Water system	A	B	C	D
Minimum water inlet pressure 2 bar	●	●	●	●
Hydraulic water booster pump. Capacity at 15 bar 250 l/min	●		●	
Water injection pump. Capacity 50 l/min	○	●	○	●
Water hose reel including hose*	○	○	○	○
High pressure washing kit	○	○	○	○
Remote controlled water cannon	○	○	○	○

* Not applicable when booster compressor is installed on ITH drill rigs

Technical specifications

● = Standard ○ = Option
A = Simba E70 S **B** = Simba E70 S ITH **C** = Simba E70 SG **D** = Simba E70 SG ITH

Carrier	A	B	C	D
Deutz TCD 2013, L04 2 V Stage III A Tier 3, 120 kW	○	○		
Deutz TCD 4.1, L04 Stage V, 115 kW	○	○		
Deutz TCD 2012, L06 2 V Stage III A Tier 3, 155 kW	○	○		
Deutz TCD 6.1, L06 Stage V, 180 kW	○	○		
Deutz TCD 4.1, L04, CN4, 115 kW	○	○		
Traction motor 150 kW			●	●
Rear axel DANA Spicer 114/S1 +-8 degree oscillation	●	●	●	●
Articulated steering ±38° steering angle	●	●	●	●
Four-wheel drive	●	●	●	●
Hose/cable guiding at water/cable reel	○	○	○	○
Automatic differential lock on front axle, limited slip	●	●	●	●
Tires 14.00xR24	●	●	●	●
Rig alignment laser	●	●	●	●
Front and rear hydraulic jacks	●	●	●	●
Fuel tank, volume 110 l	●	●		
Central grease point	●	●	●	●
Fire suppression system ANSUL (manual or automatic)	○	○	○	○
Fire suppression system FORREX (manual or automatic)	○	○	○	○
E-tramming (electrical/hydraulic tramming)	○	○		
Manual lubrication kit	○	○	○	○
Boot washing kit	○	○	○	○

Cabin	A	B	C	D
ROPS and FOPS certified cabin, noise level <65 dB(A)	●	●	●	●
Low profile cabin ROPS and FOPS certified 150 mm lower than standard - seated operation only	○	○	○	○
Mounting height -140 mm from standard height	○	○	○	○
Cabin lift/tilt system, 375 mm/15°	○	○	○	○
Swingable seat for drilling and tramming	○	○	○	○
Reversing camera with monitor	●	●	●	●
Reel camera	○	○	○	○
12 V outlet	●	●	●	●
Joystick-controlled spotlights left and/or right, 70 W	○	○	○	○
FOPS-approved grizzly bar for front window	○	○	○	○
Mediaplayer	○	○	○	○
Air condition	●	●	●	●
Heating function for air conditioning (water transferred)	○	○	○	○
Electrical heater, 1.2 kW, 230 V (CE)	○	○	○	○
Cabin body made of stainless steel	○	○	○	○

Drifter rods/pipes

Rock drill	Rod/pipe	Guide tubes	Hole diameter (mm)
COP 1838+ COP1838+MUX	T38 Speedrod	TDS 64	51-64 64-76
COP1838+HUX	T45 Speedrod	TDS 64/TDS 76	76-89
	TDS 45	N/A	48-76
	TDS 54	N/A	64-89
	TDS 64 (ET45)	N/A	70-89
COP 2550UX	T51	TDS 76	89-115
	TDS 64 (ET45)	N/A	76-115
	TDS 76 (ET55)	N/A	89-102
	TDS 76 (ET55)	N/A	89-115 (ST58 shank adapter)
	ET51	N/A	89-115 (T51 shank adapter)
COP 3060	TDS 76 (ET55)	N/A	89–102
	TDS 87 (ET66)	N/A	102–115
	ET51	N/A	89-115 (T51 shank adapter)
COP 44	TAC 76/89	N/A	110-125
COP 54	TAC 89 (TAC102)	N/A	134-152
COP 64	TAC 89 (TAC102)	N/A	156-178

Note: ET45, ET51, ET55 and ET66 are replacements for TDS pipes. ET pipes also require the new version of shank adapter.

Recommended cable size and length

Voltage	Type	Dimension (mm²)	Diameter (mm)	Length (m)	Length ITH (m)
380-400 V	Buflex	3x185+3G35	56	80	65
440-500 V	Buflex	3x150+3G25	52	120	70
550 V	Buflex	3x120+3G25	46	120	95
660-690 V	Buflex	3x95+3G16	45	150	125
1 000 V	Buflex	3x50+3G10	33	200	200

Recommendations are given for surrounding temperature of 40°C and up to a height of 2 000 m. Cable dimension for battery version depends on charging cycle.

Recommended drift size

Feed	Rod	Minimum HxW
BMH 214/234	1 220	3 600x3 600 mm
BMH 215/235	1 525	3 900x3 900 mm
BMH 216/236	1 830	4 200x4 200 mm

Noise and vibration

Operator sound pressure level in cabin, drilling, free field (ISO 11201)	65±3 dB(A) re 20 uPa
Operator sound pressure level working close to machine, drilling, free field	104±6 dB(A) re 20 uPa
Sound power level (ISO 3744), drilling, free field	128 dB(A) re 1 pW
Vibration levels seated, drilling (ISO 2631-1) cabin	0.07±0.07 m/s^2
Vibration levels standing, drilling (ISO 2631-1) cabin	0.07±0.07 m/s^2

Technical specifications

● = Standard ○ = Option

Dimensions in millimeters

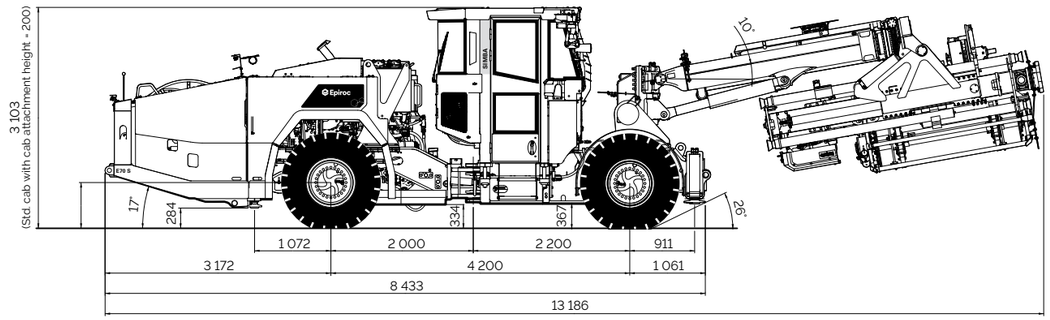

Illustration shows Simba E70 S in right side view with 6-cylinder engine and E-tramming.

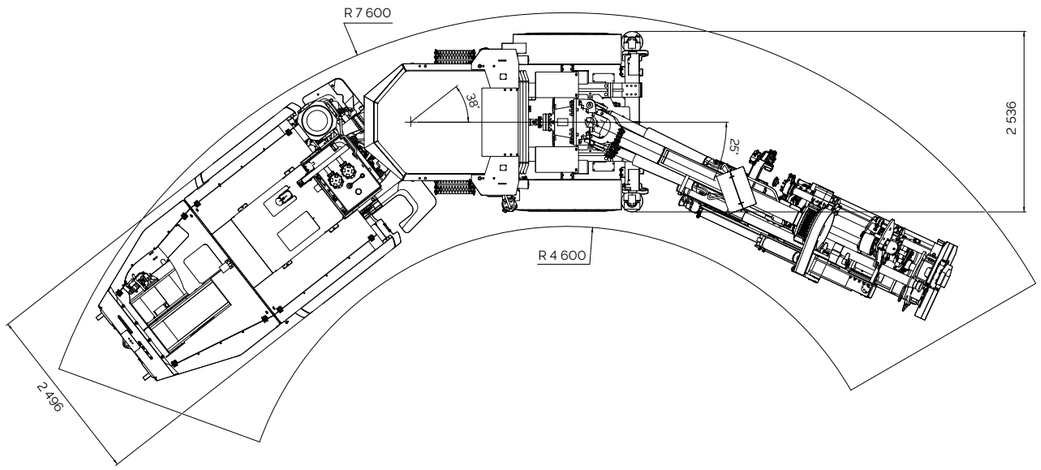

Illustration shows turning radius of Simba E70 S with 6-cylinder engine and E-tramming.

Dimensions

Measurement	Simba E70	Simba E70 ITH	Simba E70 with battery driveline
Width	2 536 mm	2 536 mm	2 536 mm
Length, tramming	12 700/13 200 mm dep. on 4 or 6 cylinder engine	13 700 mm	13 200 mm
Height with cabin	3 100 mm	3 100 mm	3 100 mm
Height roof up/down	2 350/3 050 mm	2 350/3 050 mm	2 350/3 050 mm
Ground clearence	330 mm	330 mm	330 mm
Turning radius outer/inner	7 600/4 600 mm	7 600/4 600 mm	7 600/4 600 mm

Gross weight (depending on configuration)

Rig type	Total	Boom side	Engine side
Simba E70 S	31 500 kg	20 000 kg	11 500 kg
Simba E70 S ITH	30 000 kg	19 000 kg	11 000 kg
Simba E70 SG	33 500 kg	20 000 kg	13 500 kg

Tramming speed

On flat ground (rolling resistance 0.05)*	>15 km/h
On incline 1:8	>5 km/h

* Electric driveline >12 km/h

Technical specifications

Dimensions in millimeters

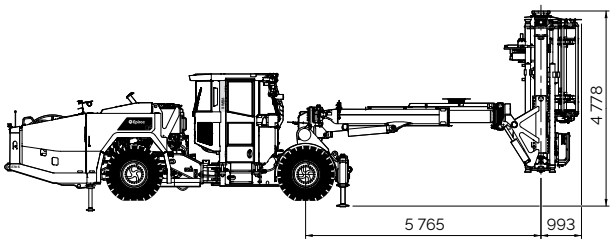

Illustration shows Simba E70 S with BUT 45 PDS boom.

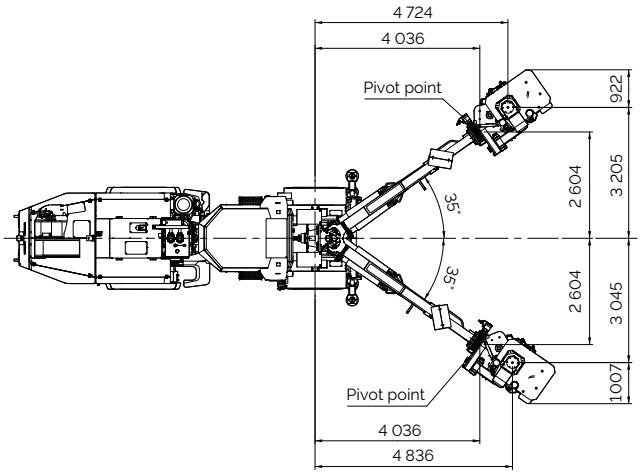

Illustration shows Simba E70 S with BUT 45 PDS boom.

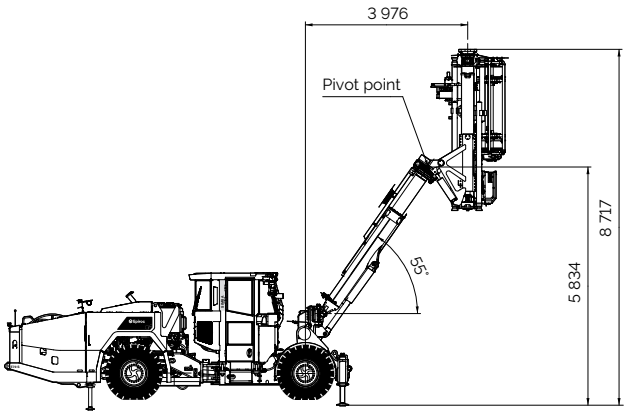

Illustration shows Simba E70 S with BUT 45 PDS boom.

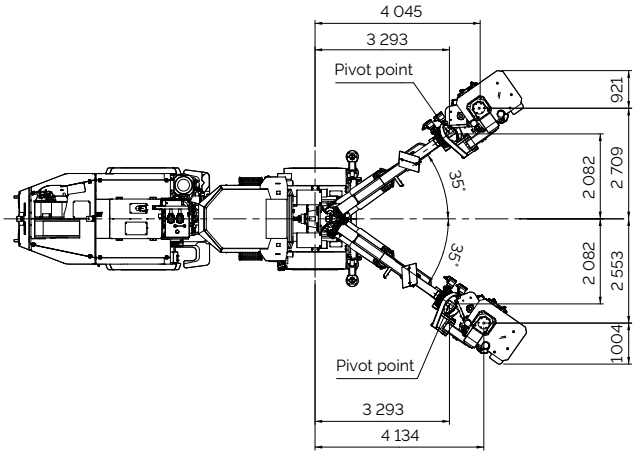

Illustration shows Simba E70 S with BUT 45 PDS boom.

United in performance. Inspired by innovation.

Performance unites us, innovation inspires us, and commitment drives us to keep moving forward. Count on Epiroc to deliver the solutions you need to succeed today and the technology to lead tomorrow.

epiroc.com

Epiroc